P12
P15
P18

Installation Instructions

IA P12 /P15 /P18 03.11 GB
SN 707770

BÖWE Textile Cleaning

CE

This machine, which works with the solvent
TETRACHLORETHENE (perc), complies with
the EC Machinery Directive 98/37 EC,
the EC Low Voltage Directive 73/23 EEC
in the version RL 93/68 EEC,
EMC Directive 89/336/EEC
and the Harmonized Standards:

EN ISO 12100-1 and 12100-2
EN 60204-1 (DIN-VDE 0113 Part I)
EN 418
EN ISO 8230*

The contents are correct to the best of our knowledge and belief and correspond to the present state of the technology.
No legal claims can be derived.

Subject to technical changes.
Reproduction or duplication only with our express permission.

BÖWE Textile Cleaning

* with the options - Safety separator and
- Distillation overfill preventer

Dear Customer,

It gives us great pleasure to present you with your **BÖWE** machine. You are acquiring a machine that has been designed and manufactured to meet the highest quality standards and that corresponds to the latest standards in research and technology.

Please do not put these operating instructions away without reading them!

This manual contains all of the important information that you need to operate your drycleaning machine.

If the prescribed maintenance work is neglected or improperly performed, if repair work is carried out by service technicians other than those authorized by BÖWE or if parts other than original BÖWE spare parts are used, we naturally cannot fulfill the guarantee obligations according to our General Terms of Delivery.

Measurements and other values reflect the status as of the printing date.

We reserve the right to make technical changes at any time and without prior notice in the interest of continuing development or when changes are considered to be necessary for constructional reasons.

Reproduction - including excerpts - is permitted only with written permission and when the source of the information is indicated.

BÖWE Textile Cleaning GmbH
Dr.-Georg-Schaeffler-Strasse 22, D-77815 Bühl
phone 0049-(0)7223-80103-0, fax 0049-(0)7223-80103-29
email: vertrieb@boewe-tc.de
www.boewe-tc.de

Diese Seite ist bewusst leergelassen
This page intentionally left blank

Necessary Operating Materials and Chemical Additives

Dear Customer,
In order to prevent any delays in the commissioning of your Drycleaning Machine P 12 /P15 /P18, we ask you to make sure that the following operating materials and chemical additives are available.

- Solvent
Use only stabilized, high-purity TETRACHLORETHENE (PERC), in accordance with DIN 53978.

We recommend that only fresh solvent should be used in order to avoid contamination through dirt, foreign substances and smells.

Total filling amount for the first filling
3-tank model:

P 12:	about 280 l (about 455 kg) or about 74 US gal (about 1003 lbs)
P 15:	about 330 l (about 535 kg) or about 87 US gal (about 1180 lbs)
P 18:	about 380 l (about 615 kg) or about 100 US gal (about 1356 lbs)

Tank I: Minimum filling volume:	P12:	60 l (15.8 US gal)
	P15:	75 l (19.8 US gal)
	P18:	90 l (23.7 US gal)
Tank III: Minimum filling volume:	P12:	60 l (15.8 US gal)
	P15:	75 l (19.8 US gal)
	P18:	90 l (23.7 US gal)

For machines with 2 economy filters: + 40 l (10.5 US gal)
For machines with 2 economy filters and 1 cartridge filter: + 55 l (14.5 US gal)

- Chemical additives
The chemical additives used must be heat-resistant under operating conditions.
Please provide the following additives, depending on the equipment:

- Drycleaning detergent
- Antistatic agent
- Waterproofing agent
- Pre- and post-spotting agents

BÖWE P12 /P15 /P18

Contents

1 General Information 1
1.1 Technical Literature 1
1.2 Laws, Ordinances, Directives 1
1.3 Corrective Maintenance Work 1
2 Safety Regulations 2
2.1 Safe Installation and Commissioning 2
2.2 Authorized Use 2
2.3 Operation and Maintenance 3
2.4 Repair Work 4
2.5 Decocommissioning and Disassembling 5
2.6 Further Safety Regulations 5
3 View of the Machine 8
4 Transport 10
4.1 Entry 10
5 Installation 12
5.1 Operating Environment 12
5.1.1 Regulations 12
5.1.2 Temperature 12
5.1.3 Structural Surroundings 12
5.1.4 Machine Environment 13
5.2 Place of Installation 14
5.2.1 Space Requirements 14
5.2.2 Machine Dimensions 20
5.3 Floor Load 28
5.3.1 Dimensions 28
5.4 Foundation 30
5.4.1 Foundation Dimensions 30
5.4.2 Anchoring Surface 34
5.4.3 Sound and Vibration Insulation 34
6 Fixing the Machine in Place 35
6.1 Machine Trough 35
6.2 Anchoring Methods 35
7 Connection 38
7.1 Dimensioned Drawing of the Machine Connections 38
7.2 Lines and Pipelines 40
7.2.1 Steam 40
7.2.2 Condensate 40
7.2.3 Cooling Water Supply 41
7.2.4 Cooling Water Outlet 43
7.2.5 Compressed Air 43

Contents

7.2.6 Process Water 43
7.2.7 Aeration Line 43
7.3 Electrical Connection 44
7.3.1 Permissible Voltage Range 45
7.3.2 Room Ventilation Control 46
8 Important Information 47
8.1 First Startup 47
8.1.1 Preparatory Work 47
8.1.2 Filling Machine With Solvent 47
8.1.3 Refilling Solvent 48
8.1.4 Filling Slimsorba Carbon Container (Optional Equipment) 49
8.2 Refrigeration Unit 49
9 Technical Specifications 50
10 Settings and Optimum Operating Values 59
10 Settings and Optimum Operating Values 61
11 Safety Remarks Located on the Machine 63

1 General Information

1.1 Technical Literature

We make particular reference here to the literature and leaflets of the trade and professional associations, research institutes and mutual indemnity associations, as well as safety data sheets provided by the solvent producers.

1.2 Laws, Ordinances, Directives

To avoid health risks and environmental damage, you must strictly comply with all directives and regulations pertaining to the industry, particularly with regard to proper handling of TETRACHLORETHENE (perc).
In any case, you must observe the applicable laws and regulations in the country in which the machine is installed.

The machine complies with the following regulations:
- EC Machinery Directive 98/37 EC
- EC Low Voltage Directive 73/23 EEC in the version RL 93/68 EEC
- EMC Directive 89/336/EEC
- Pressure Equipment Directive 97/23/EC

Applied harmonized standards:
- EN ISO 12100-1 and 12100-2
- EN 60204-1 (DIN-VDE 0113 Part 1)
- EN ISO 8230 *
- EN 418

Applied national standards and directives:
- Accident Prevention Regulations for Refrigeration Plants, Heat Pumps and Cooling Equipment (BGVD4)
- CFC and Halon Prohibition Ordinance

When operating the system in Germany, the following laws and directives must be observed:

- 2. BImSchV
- Accident Prevention Regulations for Chemical Cleaning (BGR 500 chapter 2.14)
- Water Resources Law (WHG § 19)
- Waste Disposal Law
- Technical Regulations for Dangerous Working Materials (TRGS 402)
- VDI Guidelines
- VDE Regulations
- GefStoffV with technical rules (Regulation for hazardous material)
- Betriebssicherheitsverordnung (Your local regulations for operational safety)

1.3 Corrective Maintenance Work

We recommend that you commission the customer service department of the BÖWE organization for the maintenance, servicing and operating safety of this valuable drycleaning machine. The customer service organization uses original BÖWE spare parts when making replacements.

* with the options - safety separator and
- distillation overfill preventer

2 Safety Regulations 2

Each person who is charged with the installation, commissioning, operation, maintenance or repair of the drycleaning machine must first have read and understood the operating and installation instructions. In particular, we refer to the observation of the relevant laws and regulations for the countries in question.

The cleaning machine has been built according to the latest state of the technology. Only persons who are familiar with the machine and informed of the possible risks are authorized to set up, install, commission, operate, maintain and repair this machine. The relevant accident prevention regulations and other regulations involving safety and medical care for workers must be strictly adhered to.

Safety Symbols

This safety symbol identifies particular information regarding occupational safety. It points out hazards and serves to protect personnel from physical injury. All applicable laws and regulations must be observed; the information on occupational safety only emphasizes particularly dangerous areas. Failure to observe this information can result in serious consequences for the health, up to and including life-threatening injuries.

This symbol provides important information on the correct use of the machine. Failure to observe this information can lead to disturbances in the machine or surrounding area.

You are not permitted to bypass or turn off safety devices or to make them otherwise inoperative. You must observe all applicable industrial safety regulations during installation and repair work. You must dispose of distillation residues and process water in accordance with regulations.

2.1 Safe Installation and Commissioning 2.1

You must install the drycleaning machine according to the enclosed installation instructions. The room must be sufficiently ventilated.

You are not permitted to operate the machine in potentially explosive areas or in areas in which systems with open flames have been installed.

The BÖWE Customer Service Department is responsible for carrying out the first startup.

2.2 Authorized Use 2.2

This drycleaning machine has been designed exclusively for operation with the solvent TETRACHLORETHENE (perc). (See "Necessary Operating Materials and Chemical Additives”). Handle these solvents only when absolutely necessary and wear protective gloves and goggles.

2 Safety Regulations 2

This closed-circuit drycleaning machine for industrial use (including use in cleaning shops) is intended for cleaning textile articles (also leather or fur or for treating skins). This drycleaning machine is not intended for customer access (such as in self-service shops).

You are not permitted to treat textiles that are easily inflammable or poisonous or that contain radioactive materials.

The definition of authorized use includes compliance with the operating, maintenance and repair conditions prescribed by BÖWE.

The manufacturer is not liable for damages resulting from unauthorized use or from changes to the system made without proper authority.

2.3 Operation and Maintenance

Only trained service personnel who are familiar with the machine are authorized to operate and maintain the BÖWE drycleaning machine. Safety regulations must be observed during operation and maintenance.

Do not start the system unless all protective devices (belt guards for cage and filter drives) are in place and functional.

Check the operating safety of the machine (sealing test) and the liquid levels daily before turning it on. Dispose of lint, process water and distillation residues according to the operating instructions.

Do not perform any maintenance work when the machine is in operation. Make sure that the solvents, lubricants and chemical additives meet the specified quality requirements.
Perform maintenance work only when the machine is turned off and secured and has cooled off.

When the machine is not in operation cooling water feed must be cut off by means of a stop valve to be fitted on site.

2 Safety Regulations 2

	<u>Attention:</u> Check the liquid level before opening the still door. The collecting tank must hold the amount that is expected to be drained and must be temperature and solvent-resistant.
	<u>Attention:</u> Do not dispose of distillation residues in the sewer system or normal garbage. You must dispose of these residues according to country-specific regulations on special waste.

Requirements for the owner and operating personnel

	According to the legal stipulations of the German accident prevention regulations BGR 500 chapter 2.14 and the 2nd BImSchV, special knowledge is required for the operation and maintenance of drycleaning systems. A person with this special knowledge must regularly be present during the operation of drycleaning systems.

As a person / body who runs a plant one is obliged to have the refrigerating plant of the dry cleaning machine inspected annually with regard to tightness.

2.4 Repair Work 2.4

Only skilled workers with suitable protection devices and work tools are authorized to carry out repairs. Make sure that there are no solvent emissions.

During repair and cleaning work:
Turn main switch off
Close the stop valves on the supply lines (steam, condensate and compressed air).
Make sure that the system cannot be turned on without permission (close off and put up a sign " <u>DO NOT TURN ON – REPAIR WORK</u>")

Always remove the main fuse when working on the electrical system.
Use only original fuses to replace defective ones.
When working on pneumatic control parts, make sure that there is no pressure in the system.
Only specially trained refrigeration technicians are authorized to make repairs to the refrigeration unit.

All spare parts used must comply with the technical standards set by the manufacturer.

2 Safety Regulations 2

2.5 Decocommissioning and Disassembling

Only skilled workers with suitable protection devices and work tools are authorized to decommission and disassembly the system.

	When decommissioning and disassembling the machine, drain all solvent from the machine, including the pipelines, valves and fittings. You must remove residues that could cause environmental pollution.

You must separate electric lines and pipelines that were used to supply or drain the machine from the supply network. Make sure that they cannot be turned on by unauthorized persons.

Have an authorized customer service technician dispose of the cooling agent from the refrigeration unit.

2.6 Further Safety Regulations

This BÖWE drycleaning machine works with TETRACHLORETHENE (perc). This solvent is hazardous to the health and is rated as slightly toxic in the context of the German Hazardous Substances Ordinance.

Drinking, eating and food storage are prohibited in the area where the machine is installed.

Open flames and fires are not allowed in the operating area. No smoking is allowed.

Install steam generators in such a way that they do not draw in air containing solvent.

A BÖWE customer service representative must train the personnel in the operation of the machine before the first startup. This training must include information on safe operation and possible hazards.

The owner is responsible for employing trained personnel to load and unload the machine and must employ well-informed and expert personnel for maintenance work. No unauthorized personnel are allowed in the area of the machine.

The daily checks prescribed in the operating instructions represent the minimum requirements. Operating personnel must immediately report any changes in the machine that could affect the safety.

2 Safety Regulations 2

The owner is obligated:

- to draw up clear regulations regarding responsibility for operation and maintenance, to ensure that the machine is only operated when it is in perfect condition and to ensure the order, safety and cleanliness at the workplace by means of instructions and inspections.

The owner is obligated to make sure that no working method is used that could place the health of the personnel, the environment or the safety of the machine at risk.

Notice and warning signs must be placed on the machine or in the operating area in plain sight. Damaged or missing signs must be replaced immediately. The specified safety regulations must be followed at all times.

In the event of any kind of hazard, stop the machine immediately and turn off the main switch.

If there is a solvent leak:

Turn off the machine

Immediately send all personnel into an open area

Open windows and doors

Cut off the cause of the solvent leak

Change any clothing that is wet with tetrachlorethene (perc)

If necessary, request a BÖWE customer service technician.

The escape of larger amounts of solvent is a reportable malfunction. It must be reported to the responsible authorities, industrial control group, fire department, water resources board or subordinate water authorities.

2 Safety Regulations

The proper handling of perchlorethylene is an important prerequisite for workplace safety.

Note the following potential hazards:

TETRACHLORETHENE (perc) is a very good grease remover; it also removes natural oils from unprotected skin.
Protection: Wear solvent-resistant protective gloves, apply skin cream with oil to the hands.

Liquid TETRACHLORETHENE (perc) is a strong irritant to the eyes.
Protection: Wear protective goggles.

Inhalation of TETRACHLORETHENE (perc) vapors reduces alcohol tolerance.
Protection: Do not consume alcohol while working or for a short time after.

TETRACHLORETHENE (perc) decomposes in the presence of an open flame or red-hot parts.
Protection: No smoking.

TETRACHLORETHENE (perc) vapors irritate the mucous membranes of the respiratory passage and eyes.
Protection: Prevent vapors from escaping and wear respiratory equipment when performing extensive maintenance work (DIN 3181 gas filter, brown).

Caution: It is possible to smell perc (odor threshold) in concentrations as low as 5 ml/m^3 of air.

TETRACHLORETHENE (perc) affects the central nervous system similar to an anesthetic and can result in unconsciousness and, in very high concentrations, even in death.

Do not overload the machine.

The operating instructions provided by the company define special rules and regulations for the area where the machine is installed. These instructions also contain information on all additional protective measures, first aid instructions and information on correct behavior during operating malfunctions, according to the local conditions.

The German Hazardous Substances Ordinance, BGR 500 chapter 2.14 and the 2nd BImSchV stipulate the obligation to provide operating instructions.

3 View of the Machine 3

Crossline

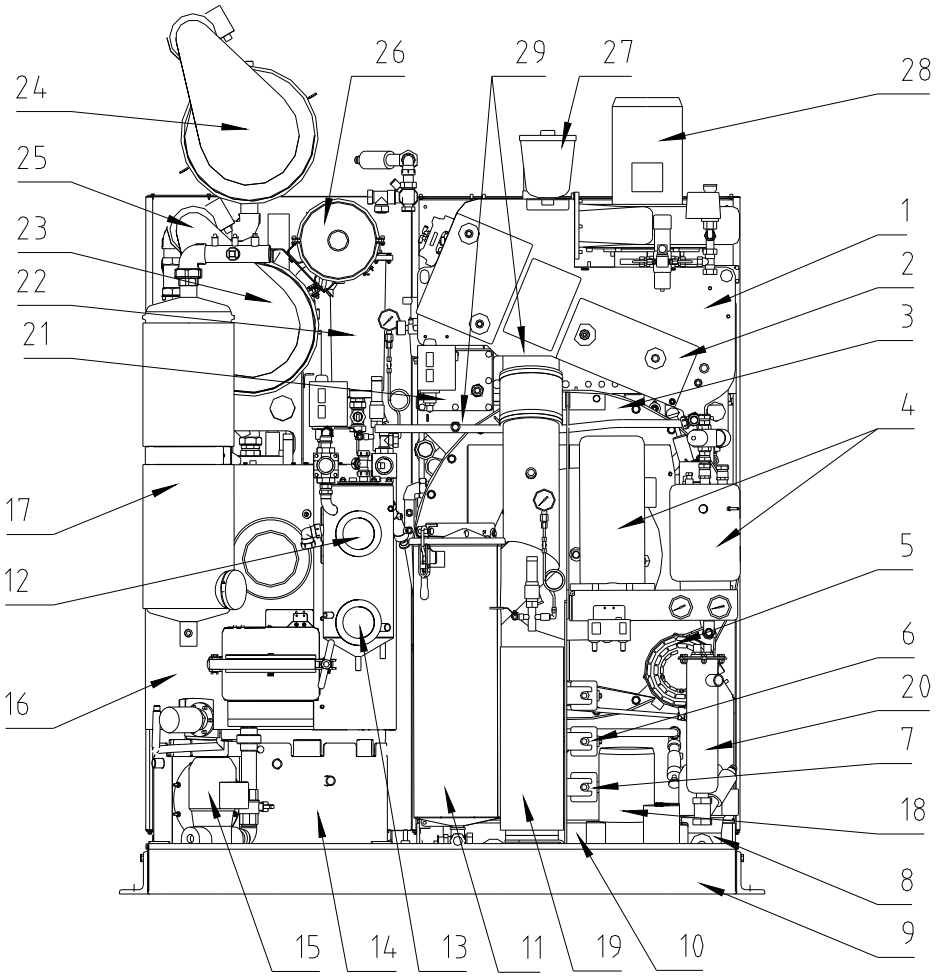

70777 0-02-0

1	Airshaft	16	Still
2	Cooling register	17	Slimsorba-carbon container *
3	Cage housing with cage	18	Slimsorba-fan *
4	Refrigeration unit	19	Electric steam generator *
5	Cage drive	20	Solvent cooling system *
6	Dosing unit	21	Heater battery
7	Sprayer *	22	Condenser
8	Solvent pump	23	Economy filter 1
9	Safety trough	24	Economy filter 2 *
10	Tanks 1 + 2	25	Filter drive
11	Button trap with lint filter	26	Cartridge-adsorption filter *
12	Water separator	27	Venting and aeration filter
13	Safety sparator *	28	Fan
14	Tank 3	29	Airshaft flaps *
15	Pump for still rake out system *		

* Option

3 View of the Machine 3

Crossline

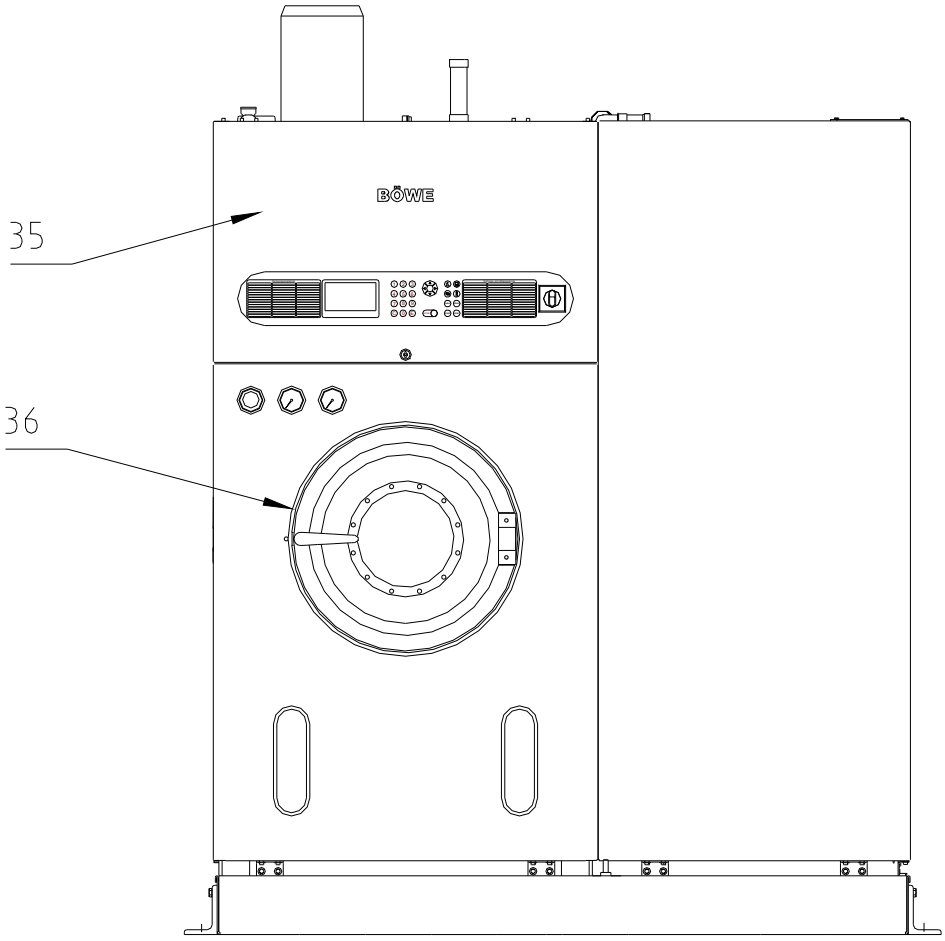

70777 0-01-A

35 Switch panel
36 Loading door

4 Transport 4

In order to guarantee that no damage results from the handling, we recommend that you consult with the appropriate experts for correct transport, installation and connection.

You must provide suitable tools and equipment for unloading, transporting, machine entry and installation. For example: crane, forklift, elevating truck, pulley block, rope, winch, crowbar, rollers, wooden blocks, wedges.

Caution

Attention: Note the center of gravity of the machine and secure against lateral tipping.

4.1 Entry

Normally the machine and distillation unit are packed in a crate or shipping box and kept in an upright position when being transported and brought in.

Package dimensions (box measurements)
P12/P15/P18

		Slimline	Crossline
Width	mm(in)	1170(46.1)	1970(77.6)
Depth P12-P15 /P18	mm(in)	2320(91.3) /2400(94.5)	1640(64.6) /1740(68.5)
Height	mm(in)	2500(98.5)	2460(96.8)
Entry dimensions after unpacking (Fan is dismantled)			
Width	mm(in)	1080(42.5)	1840(72.4)
Depth P12-P15 /P18	mm(in)	2165(85.2) /2275(89.5)	1406(55.3) /1540(60.6)
Height	mm(in)	1990(78.3)	1990(78.3)
Entry dimension without angle bracket for trough			
Width	mm(in)	935(36.8)	1695(66.7)

4. Transport 4

Package dimensions (box measurements)
P12/P15/P18 on **Softpad**

		Slimline
Width	mm(in)	1650(64.9)
Depth P12-P15 /P18	mm(in)	2400(94.5) /2500(98.4)
Height	mm(in)	2465(97.0)
Entry dimensions after unpacking (without pallet, fan is dismantled)		
Width	mm(in)	1500(59.0)
Depth P12-P15 /P18	mm(in)	2250(88.6) /2360(92.9)
Height	mm(in)	2050(80.7)

Seaworthy packing

Seaworthy packing without solvent	**Slimline (Kg / lbs)**	**Crossline (Kg / lbs)**
P12	**1340 / 2,954**	**1440 / 3,175**
P15	**1440 / 3,175**	**1540 / 3,395**
P18	**1540 / 3,395**	**1640 / 3,616**

Removing machine from the pallet:
Must be done by transport experts.
Lift the machine only at sturdy points.
Note the center of gravity of the machine and secure against lateral tipping.

5 Installation 5

5.1 Operating Environment 5.1

5.1.1 Regulations

You must observe applicable regulations concerning room ventilation and size, odor and noise emissions, accident prevention, etc. The switch panel contains contacts for the room ventilation control system (see Point 7.3.2).

Noise level: approx. 60 dB (A)
(Average value taken from 6 measurement points at a distance of
2 m (6.5 feet) from the machine and
1.60 m (5.2 ft) above the floor

If there is an increase in the air-borne sound (for example, caused by resonance) because of the spatial conditions at the place of installation (for example, the condition of and distances between walls and ceiling), you must take sound insulation measures at the site.

5.1.2 Temperature

Do not expose the machine to direct sunlight. Ensure that there is an adequate air supply for the heat exchange (heat buildup!).
The room temperature is not permitted to drop below 5 °C (41°F) because otherwise the water in the system could freeze.
During continuous operation, the room temperature is not permitted to exceed 40 °C (104 °F) because of increased solvent consumption and for safety reasons.

Heat dissipated to the surroundings: *	approx.		
	P12	P15	P18
kJ/cycle	4000	4500	5000

* 2-bath procedure, low level precleaning bath only for distillation

5.1.3 Structural Surroundings

Partitions, panels, suspended ceilings and other structures near the machine must be installed in such a way that they do not interfere with the operation, that no heat buildup occurs and that they can be easily removed for maintenance and repair work.

5 Installation 5

5.1.4 Machine Environment

Do not operate systems with open flames, such as gas-heated flatwork ironers or tumblers, in the same room because poisonous, corrosive gases could result from the solvent decomposition.

No hot surfaces with a temperature of more than 140° C (284° F) are permitted in the machine room.

You must ensure that the air from the machine room cannot escape into a heating room, if there is one in the area.
The air from the machine room is not permitted to be directed into the exhaust line of a furnace system.

5 Installation 5

5.2 Place of Installation 5.2

5.2.1 Space Requirements

The machine must be accessible for operation and maintenance and repair work (see hatched areas).

Slimline P12 /P15

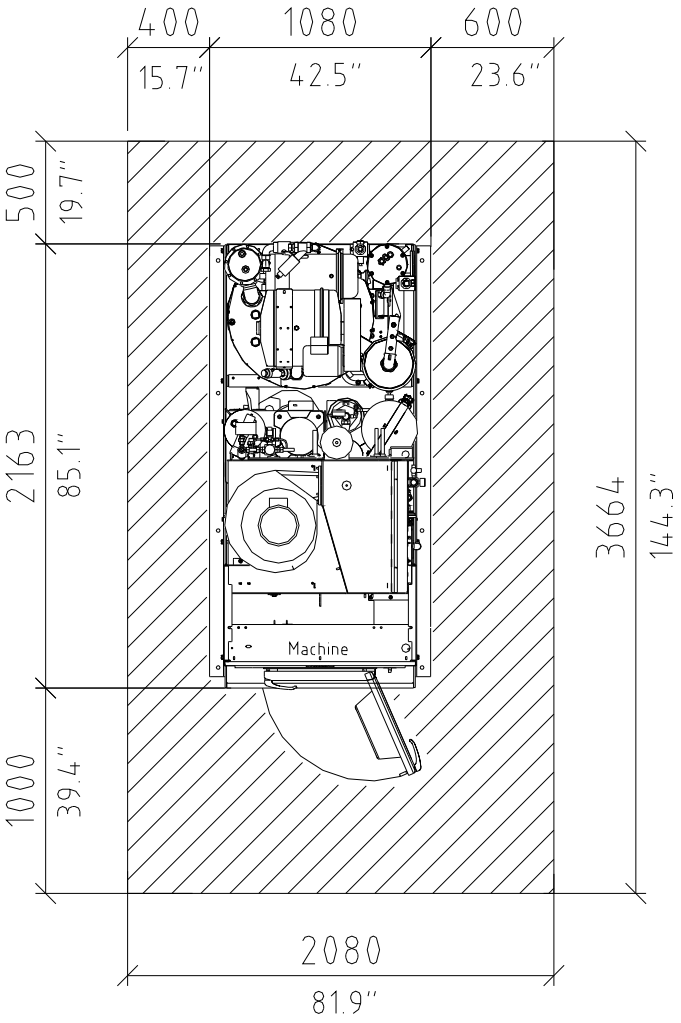

70777 0-10-0

5 Installation 5

Slimline P18

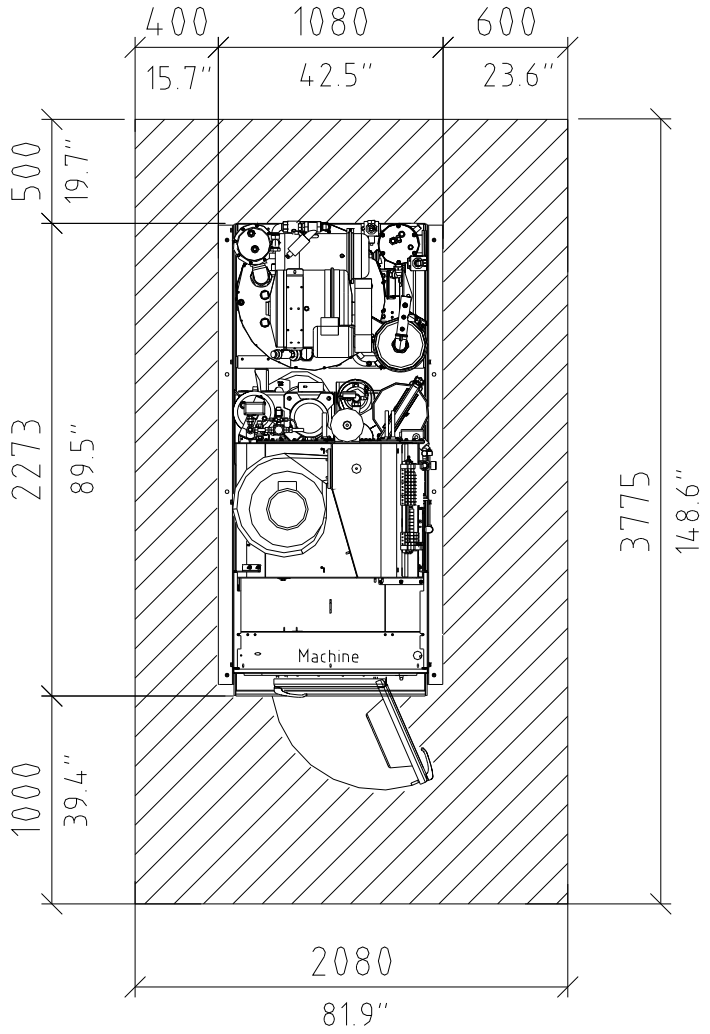

70777 0-11-0

5 Installation 5

Crossline P12 /P15

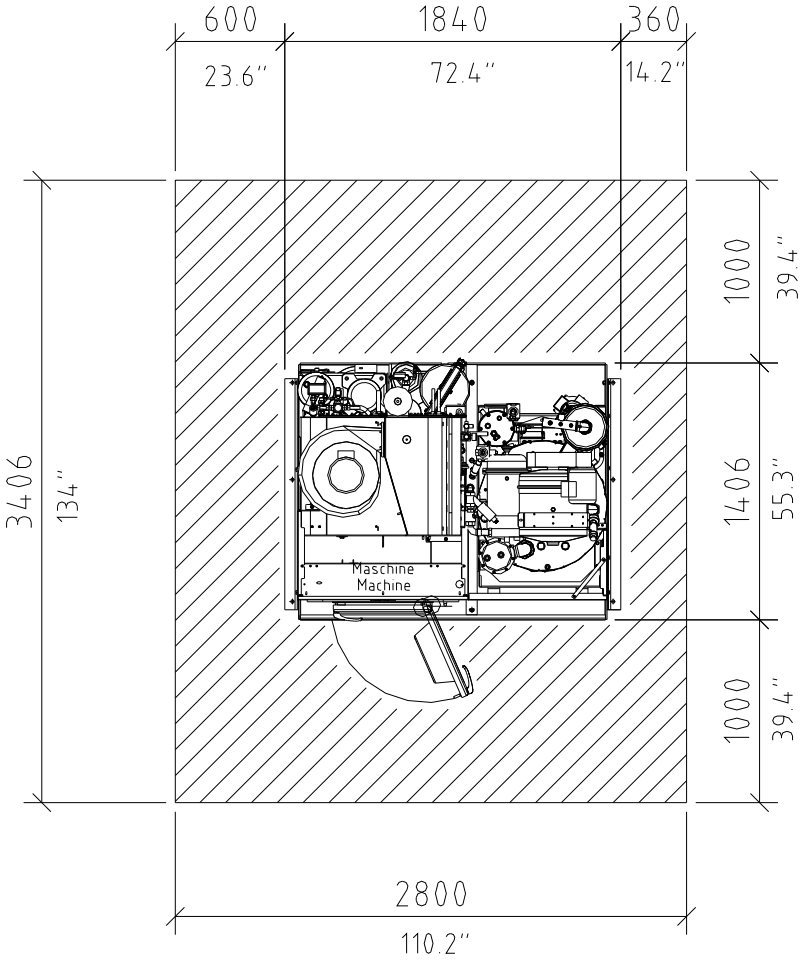

707770-03-A

5 Installation 5

Crossline P18

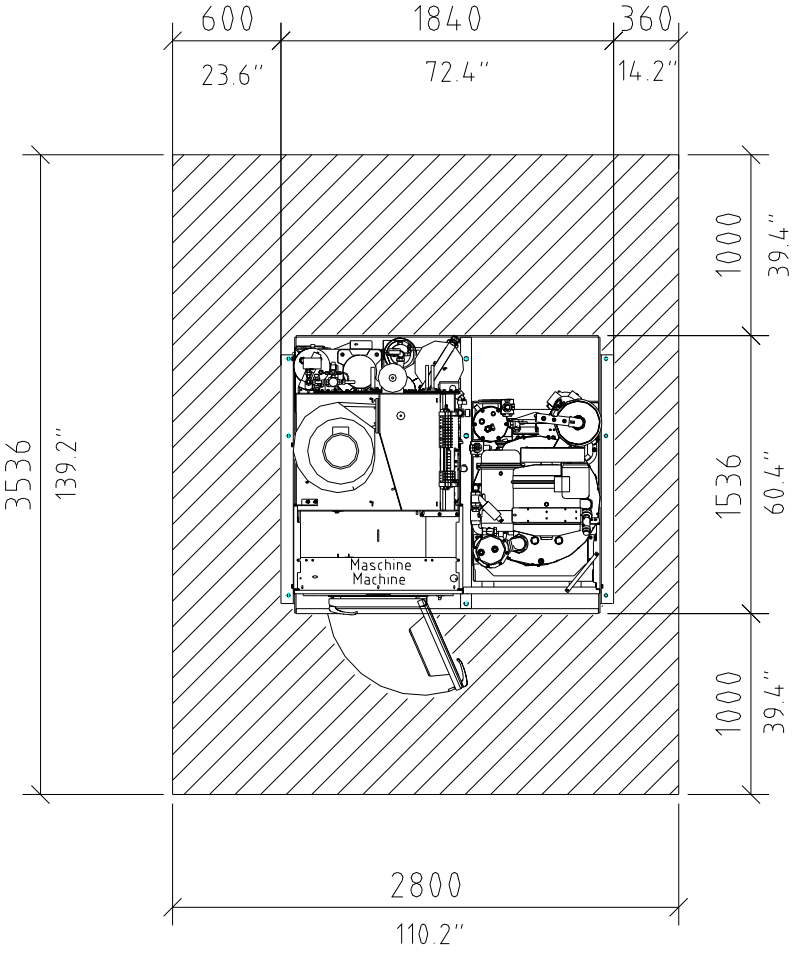

707770-12-A

5 Installation 5

Slimline M12 /M15 Softpad:

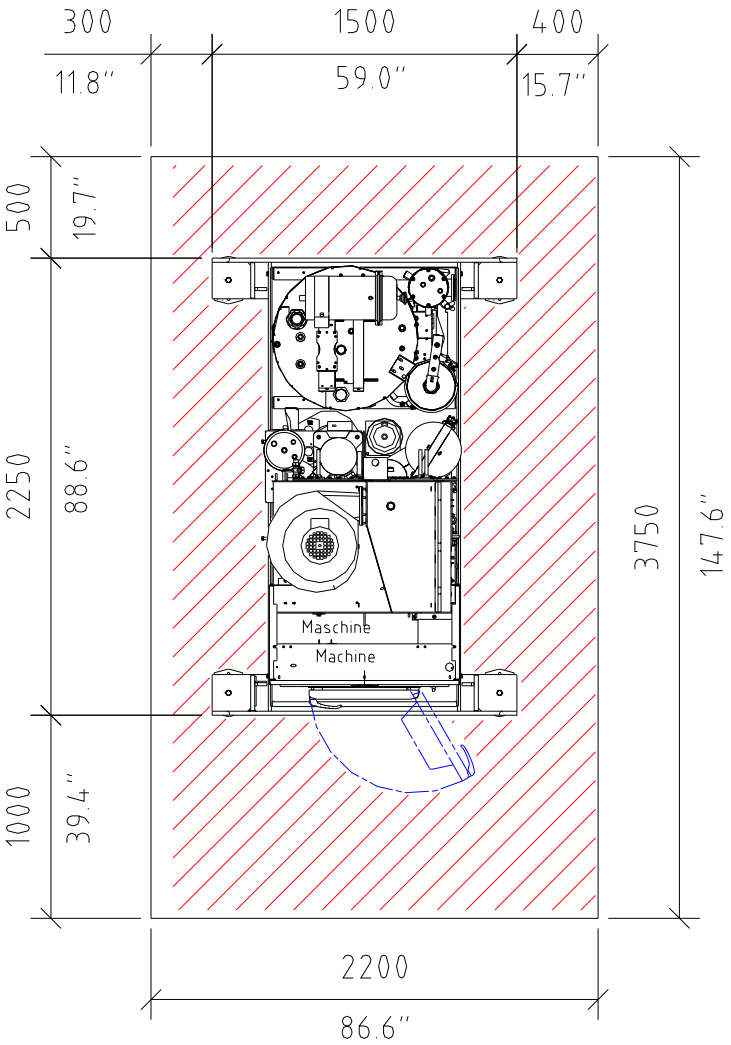

70776 7-25-0

5 Installation 5

Slimline M18 Softpad:

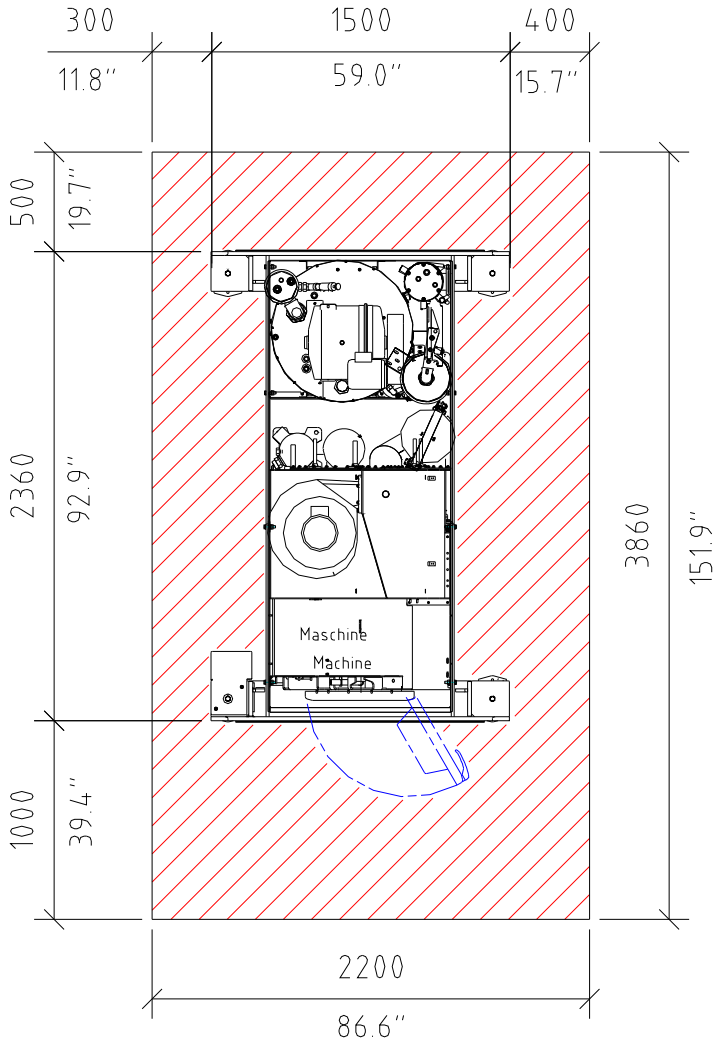

70776 7-26-0

5 Installation 5

5.2.2 Machine Dimensions

P12 /P15 /P18		**Slimline**	**Crossline**
Width without angle bracket	mm (in)	935 (36.8)	1689 (66.5)
Width with angle bracket	mm (in)	1080 (42.5)	1840 (72.4)
Depth P12-P15	mm (in)	2162 (85.1)	1406 (55.3)
Depth P18	mm (in)	2273 (89.4)	1536 (60.5)
Height inc. trough	mm (in)	2260 (89.0)	2260 (89.0)
Height inc. trough without fan motor	mm (in)	1995 (78.5)	1995 (78.5)

The dimensions given may differ if special options are used

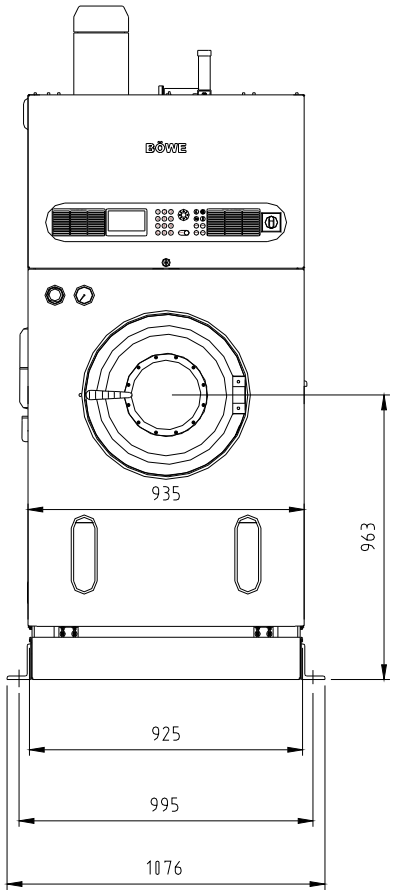

70777 0-24-0

5 Installation 5

Slimline P12 /P15

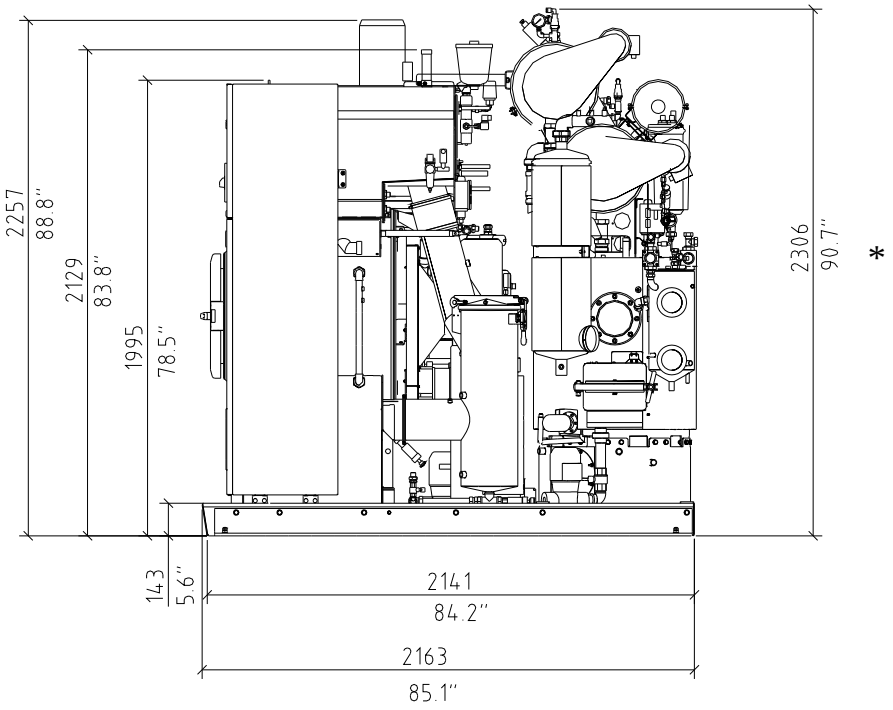

70777 0-08-0

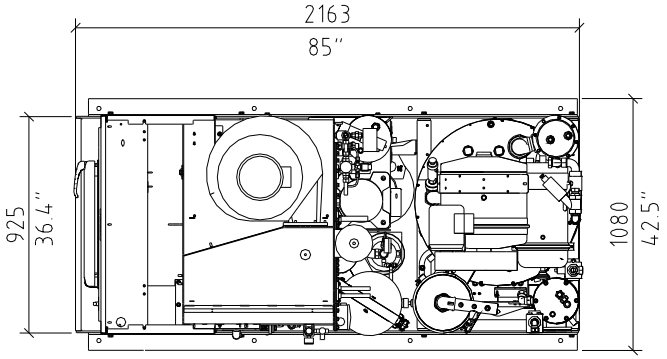

* only by second filter

70777 0-07-A

5 Installation 5

Crossline P12 /P15

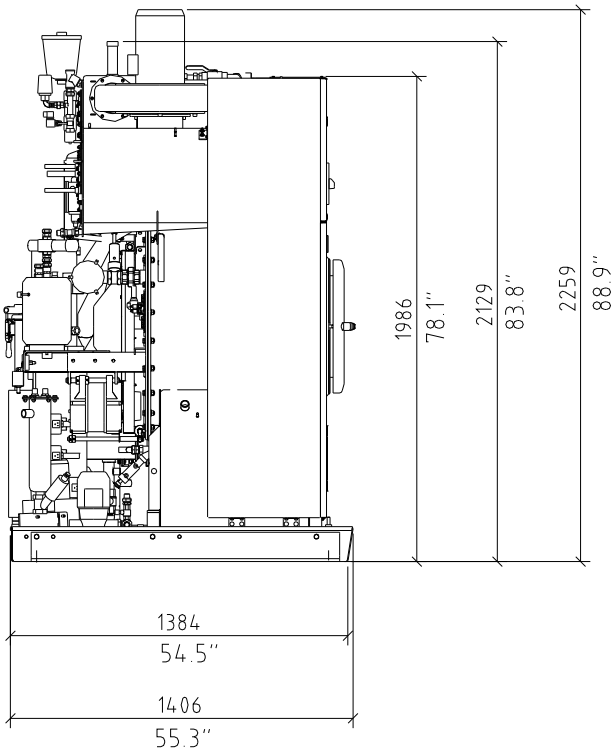

707770-04-0

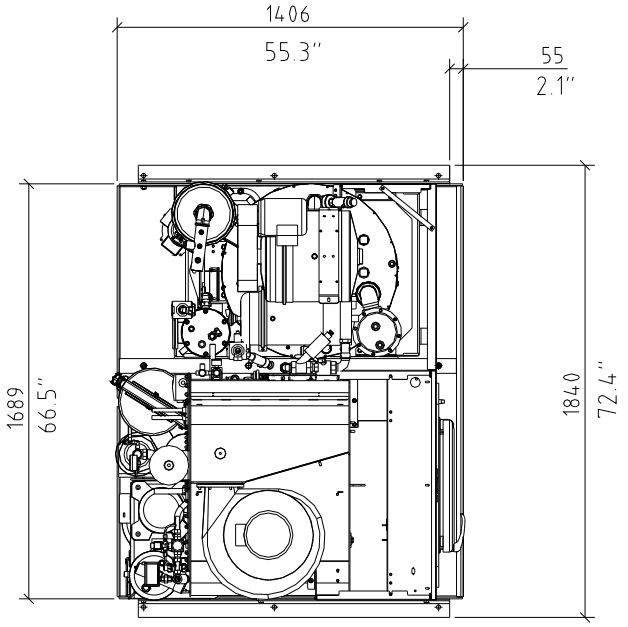

707770-05-0

5 Installation 5

Slimline P18

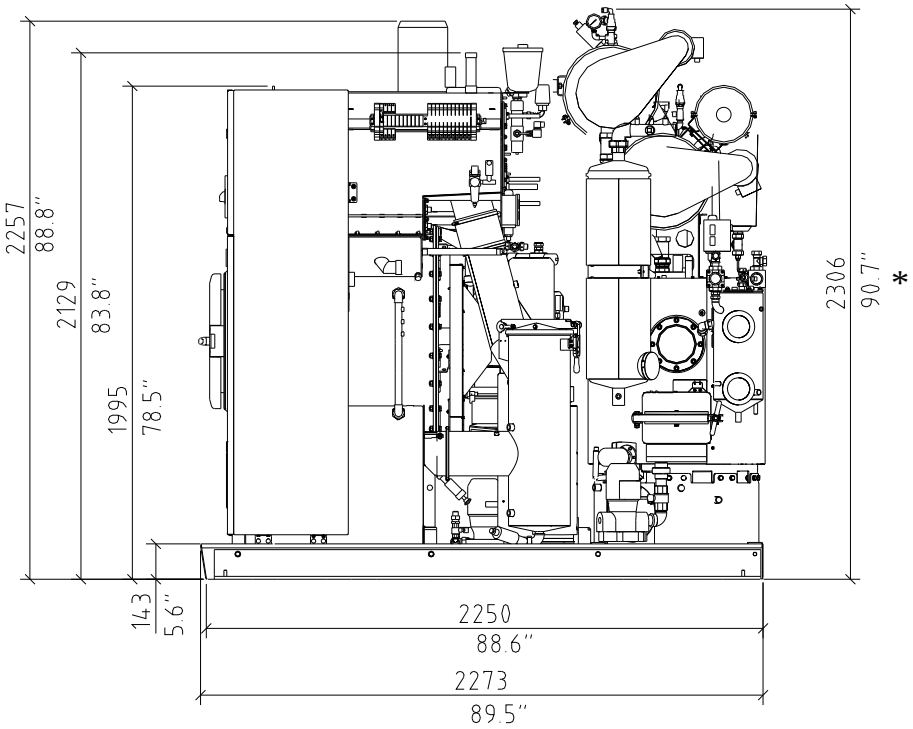

707770-13-A

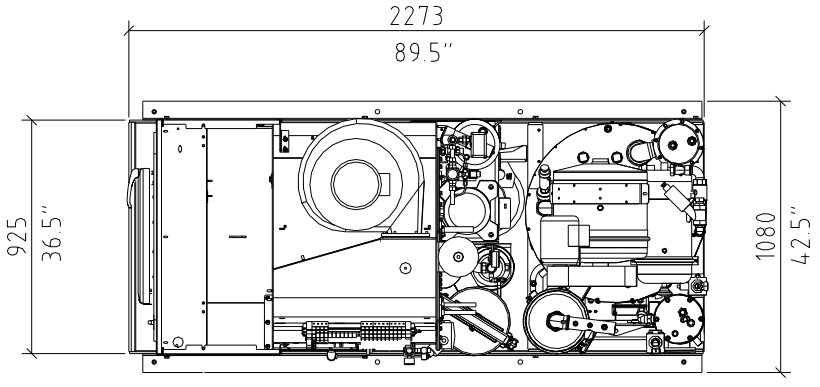

707770-14-0

* only by second filter

5 Installation 5

Crossline P18

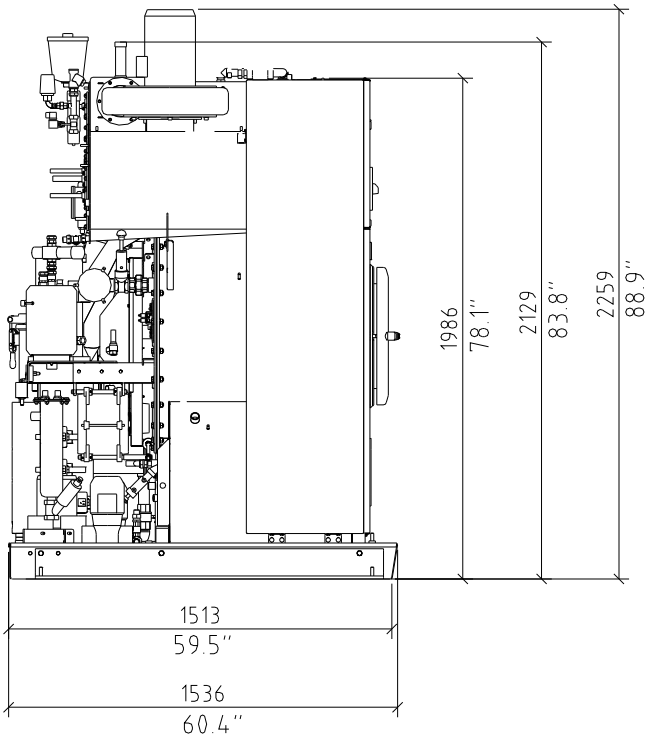

707770-15-0

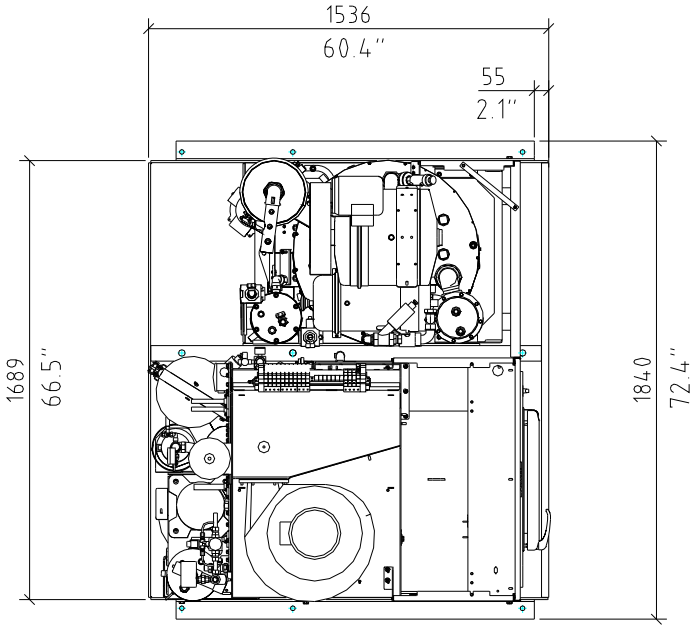

70777 0-16-0

5 Installation 5

P12 /P15 /P18 on **Softpad**		**Slimline**
Width	mm (in)	1500 (59.0)
Depth P12-P15	mm (in)	2250 (88.5)
Depth P18	mm (in)	2360 (92.9)
Height	mm (in)	2315 (91.1)
Height without fan motor	mm (in)	2050 (80.7)

The dimensions given may differ if special options are used

Slimline P12 /P15 on Softpad

Installation on Softpad will increase the height of the machine by 55 mm (2.1 in).

P12
P15
P18

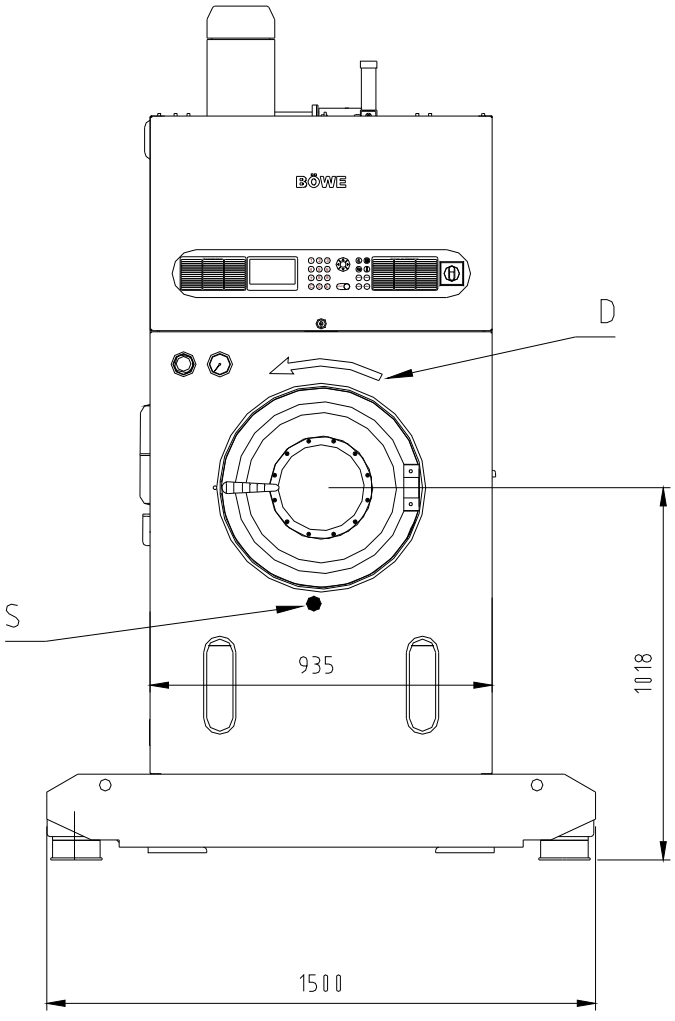

707770-26-0

S = Center of gravity
D = Direction of rotation of spinning

5 Installation 5

Slimline P12 /P15 on Softpad

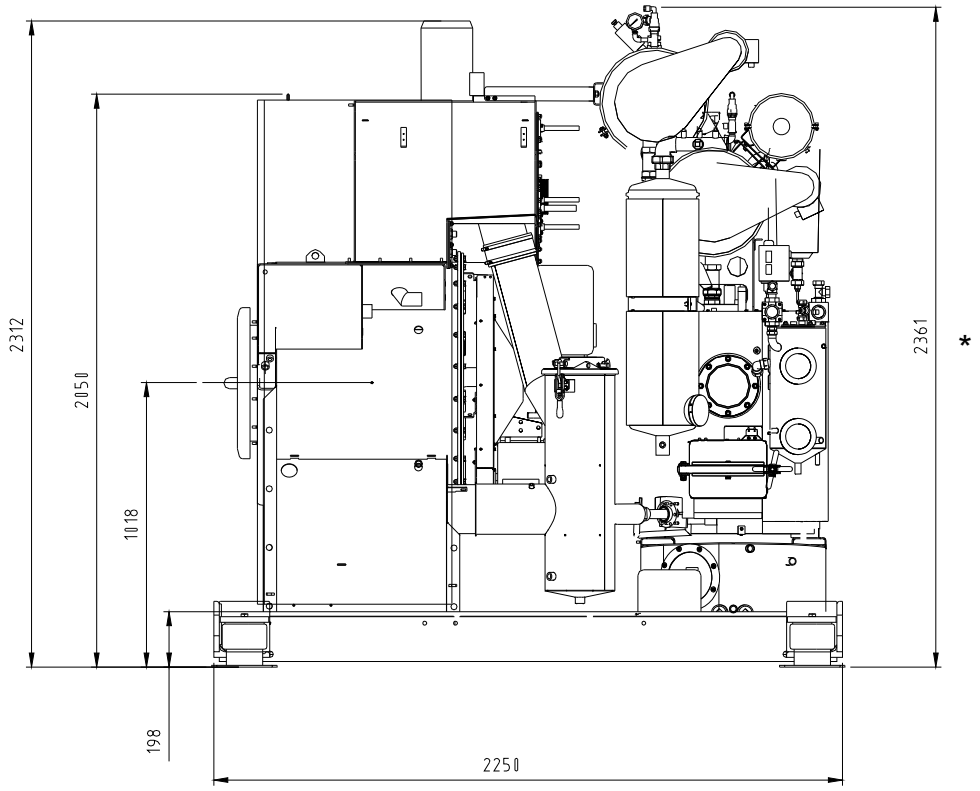

* nur bei 2. Filter

707770-27-0

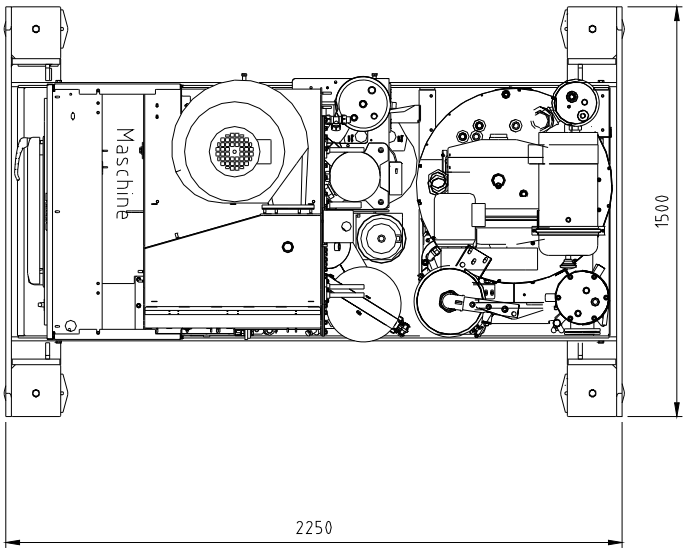

707770-28-0

5 Installation 5

Slimline P18 on Softpad

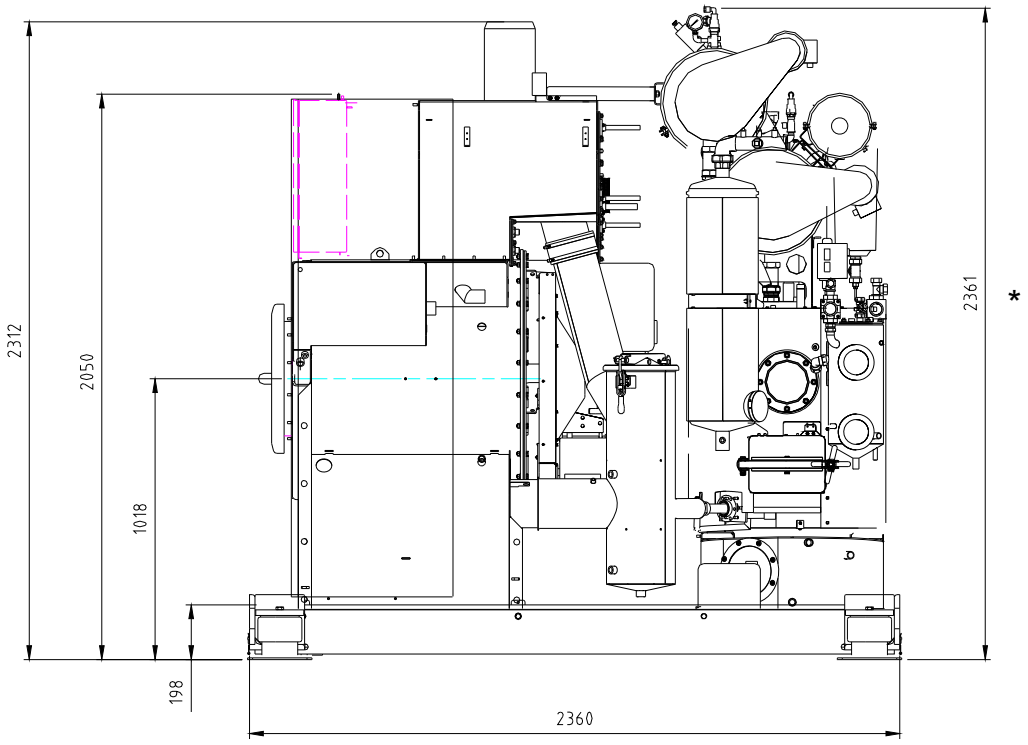

* nur bei 2. Filter

707770-29-0

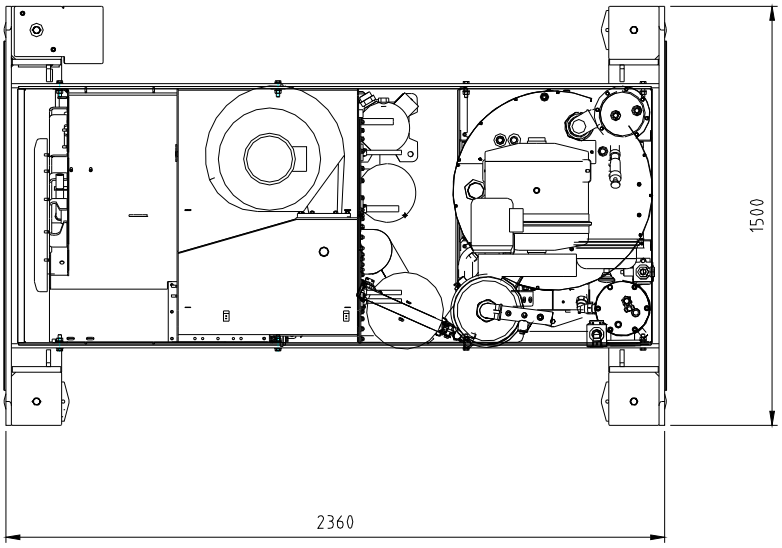

707770-30-0

5 Installation 5

5.3 Floor Load

The place of installation must be designed to comply with the specified floor load. This consists of:

Static load = machine weight + max. solvent filling

Dynamic load = cage centrifugal force with normally distributed, spin-damp garments

Do not forget to take into account the centrifugal forces that arise during the spin processes, according to the local conditions (ground, supporting walls, etc.). No resonance is permitted.
Please consult building specialists.

5.3.1 Dimensions

		Slimline			**Crossline**		
		P12	P15	P18	P12	P15	P18
Depth*	mm	1200	1310	1420	1200	1310	1420
	inches	47.2	51.6	55.9	47.2	51.6	55.9
Width*	mm	1080	1080	1080	1080	1080	1080
	inches	42.5	42.5	42.5	42.5	42.5	42.5
Portion of the floor surface for force transmission	m^2	1.3	1.41	1.53	1.3	1.41	1.53
	ft^2	14.0	15.2	16.4	14.0	15.2	16.4
Weight without solvent	kg	1140	1240	1340	1240	1340	1440
	lb	2513	2734	2954	2734	2954	3175
Weight with solvent (stat. load)	kg	1590	1770	1950	1690	1870	2050
	lb	3505	3902	4299	3726	4123	4520
Cage centrifugal force (dyn. load)	N	5900 **	7300 **	8800 **	5900 **	7300 **	8800 **
	lbs	1326 **	1640 **	1977 **	1326 **	1640 **	1977 **
Floor load (stat. + dyn. load)	N/m^2	16500 **	17500 **	18300 **	17300 **	18200 **	18900 **
	lbs/ft^2	344 **	365 **	382 **	361 **	380 **	394 **

* Portion of the machine dimensions that is decisive for the size of the cage centrifugal force and floor load.

** Calculated with:
- 12 kg/15 kg /18 kg (26.5/33.1 /39.7 lb) loaded weight, with 50% of this unevenly distributed
- Mixed outer clothing
- EBS
- 500 rpm

Building specialists will find the best solution, from both a structural and economic point of view, for the design of the foundation. They take into consideration the system or machine-related conditions and the local particulars.
Use a load dispatcher frame if the permissible load for your floor is not sufficient.

5 Installation 5

P12 /P15 /P18 on **Softpad**		**Slimline on Softpad**					
		P12	P15	P18			
Weight without solvent	kg lb	1520 3164	1620 3384	1730 3781			
Weight with solvent (stat. load)	kg lb	1970 3586	2150 3825	2340 4290			
Cage centrifugal force (dyn. load)	N lbs			1800 397			
Forces applied, per all 4 point of support: Static Dynamic	 N lbs N lbs			 6000 1323 500 110			

5.4 Foundation

5.4.1 Foundation Dimensions

Slimline P12 /P15

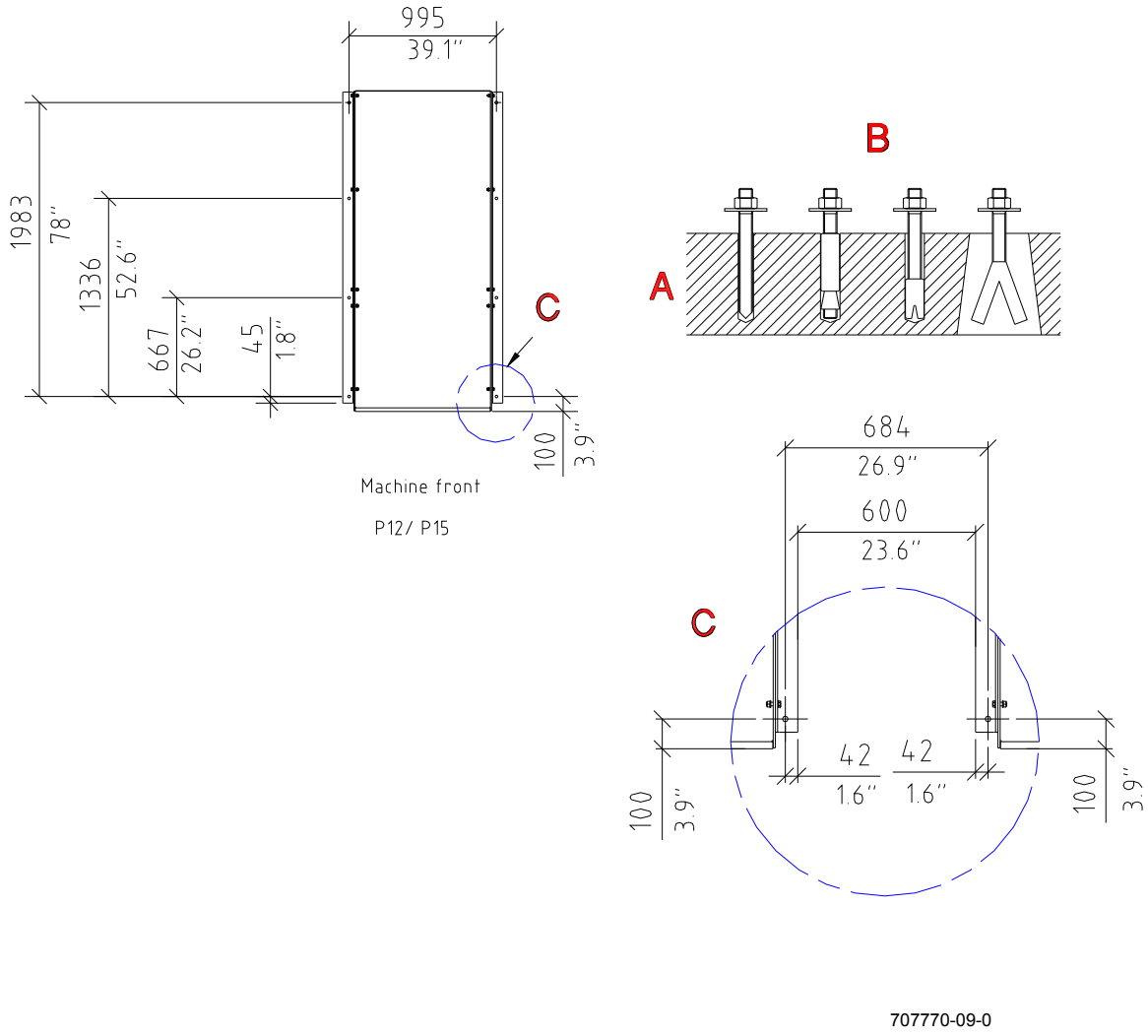

707770-09-0

A ..... Reinforced concrete

B ..... Examples for fixing the machine in place

C ..... Distance to the next machine

5 Installation 5

Crossline P12 /P15

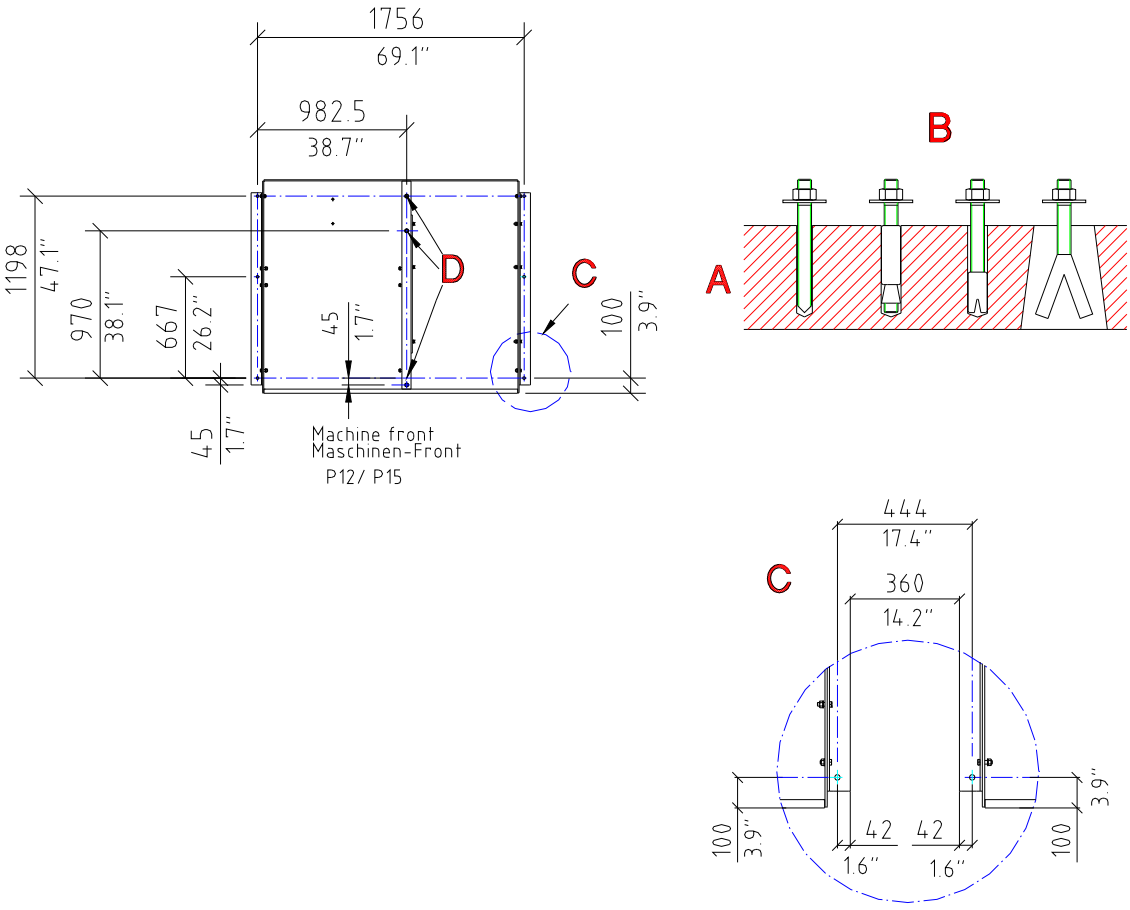

707770-06-A

A ..... Reinforced concrete

B ..... Examples for fixing the machine in place

C ..... Distance to the next machine

D ..... Use M12 x 310 foundation anchors

5 Installation 5

Slimline P18

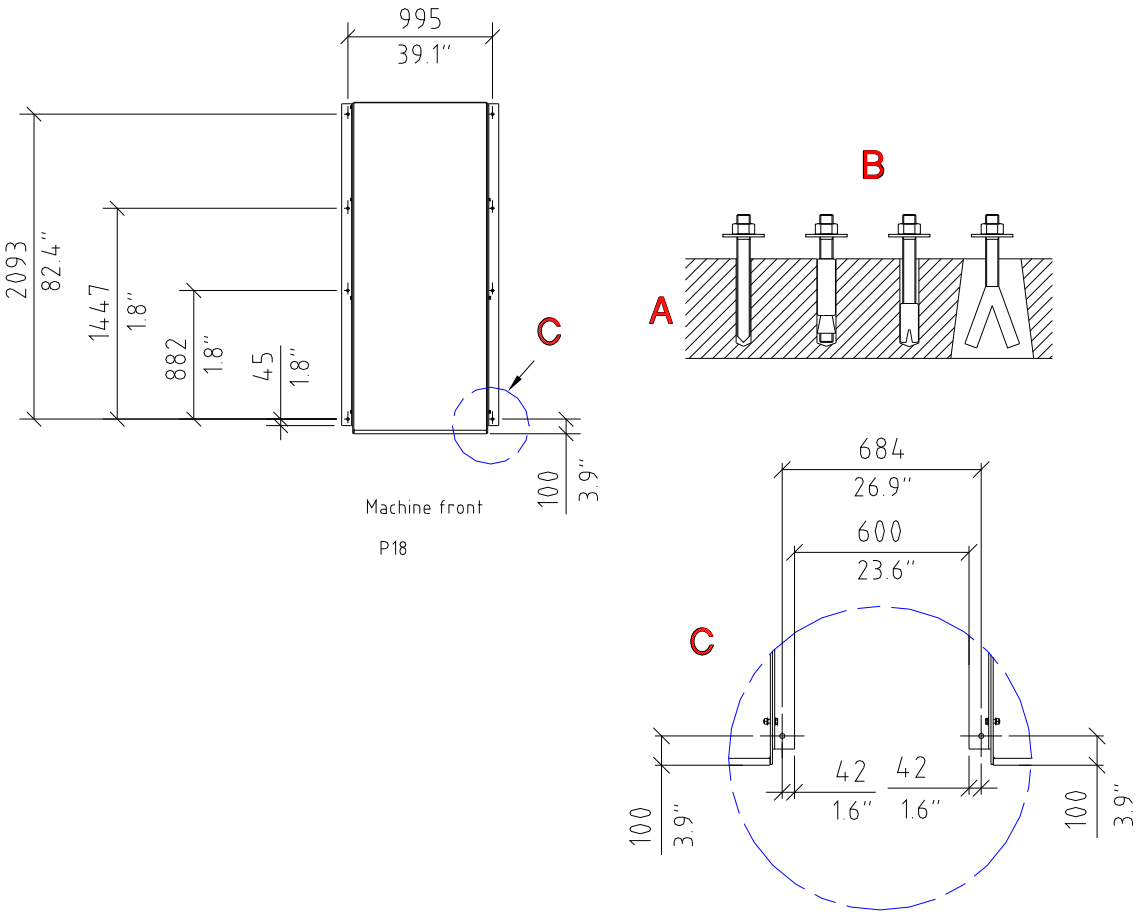

707770-17-0

A ..... Reinforced concrete

B ..... Examples for fixing the machine in place

C ..... Distance to the next machine

5 Installation 5

Crossline P18

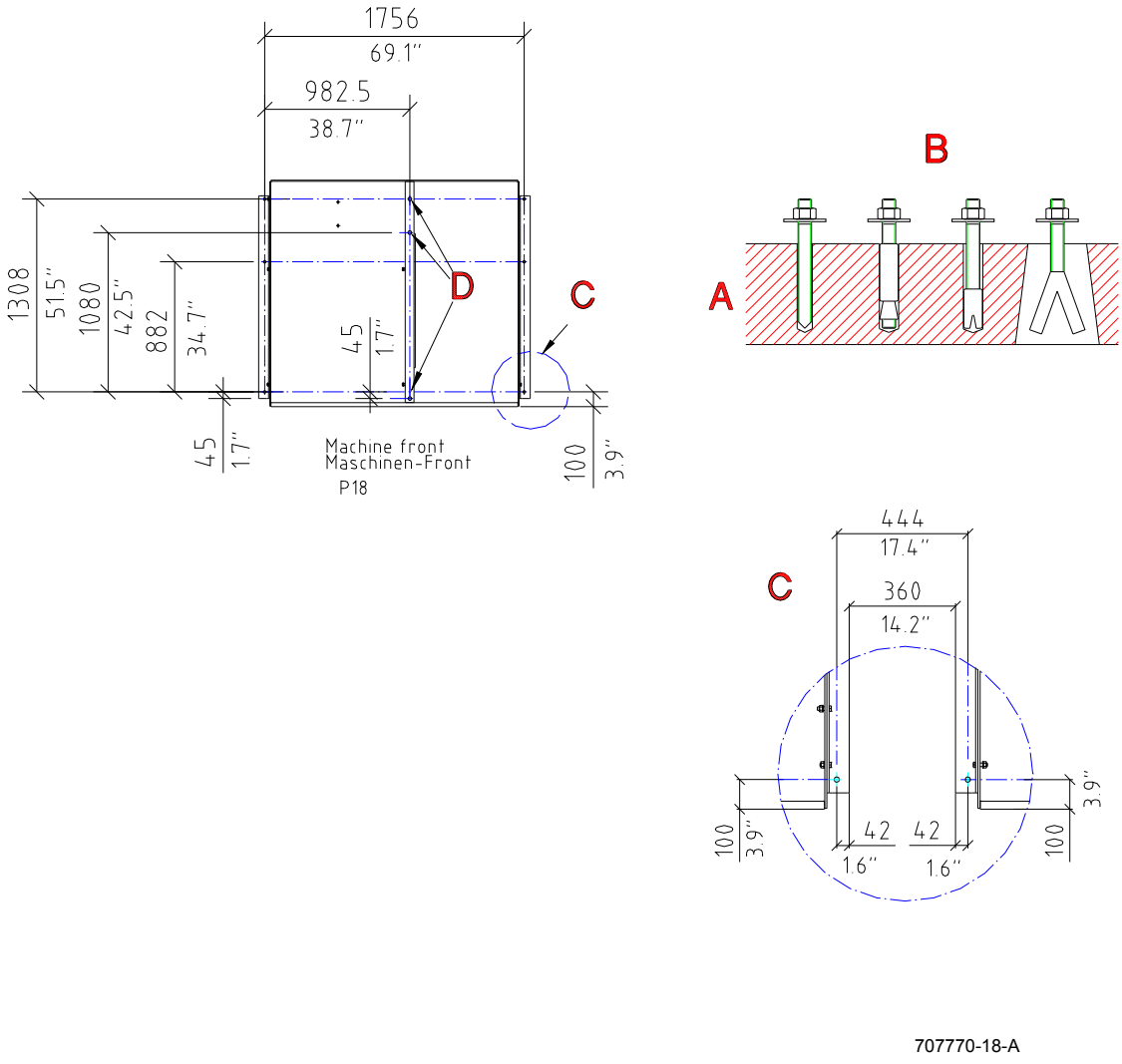

707770-18-A

A ..... Reinforced concrete

B ..... Examples for fixing the machine in place

C ..... Distance to the next machine

D ..... Use M12 x 310 foundation anchors

5 Installation 5

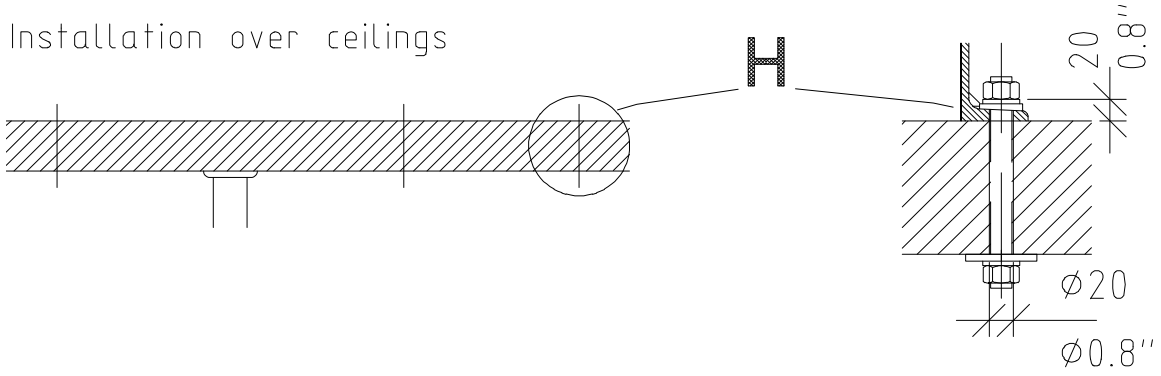

70387 1-22-0

H ..... Ceiling bore holes (20 mm (3/4 in) ∅) for through bolt, length depending on the thickness of the ceiling. Support if necessary

5.4.2 Anchoring Surface

Correct anchoring is extremely important for low-noise, fault-free operation. When installing on the foundation, the use of stone bolts is preferable.

The anchoring surface must be horizontal and level.
Never place the machine directly on felt, bituminous coatings, rubber or cork.

On uneven concrete floors, you must level the machine or safety trough with leveling plates and even out the supporting surface with filler (epoxy resins).

5.4.3 Sound and Vibration Insulation

Consult with building and insulation specialists with regard to the use of special foundations, dampers, spring cups or similar devices for special vibration insulation.

6 Fixing the Machine in Place 6

6.1 Machine Trough

The machine trough is a permanently integrated component of the machine.

Collecting capacity:	P12-P15:	Slimline: 180 l (47.5 US gal), Crossline: 213 l (27.1 US gal)
	P18:	Slimline: 190 l (50.1 gal), Crossline: 233 l (61.5 US gal)
Material:	S235 JRG2 /1.0038 /3 mm (0.1 in) painted	

6.2 Anchoring Methods

Alternatively, you can also use the following anchoring methods to fix the machine in place:

For ceiling installation:

- Through bolts (threaded rods) with washers and M12 nuts.

For foundation installation:

- Stone bolts (length 100 mm/3.9 in) for cementing into recessed or mortised holes

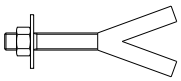

(The screws are not permitted to be longer than the thickness of the foundation).

or

M12

- Heavy-duty plug with threaded rod for deeper bore holes

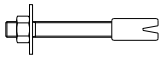

or

- Safety expansion anchors for use in bored holes

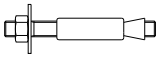

or

- Adhesive plugs/shear connectors.

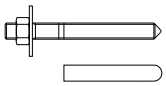

7038 71-25-0

Thread for all anchoring methods: **M 12**
Quality: Property class 8.8 - DIN 267

The fixing nuts must be self-locking, with quality that complies with DIN 985.

We will not accept any liability for damages that result from failure to comply with our recommendations and instructions.
Attention:
Pay attention to the floor load of the machine floor space.
The bore holes must be drilled deeply enough that the plug stretches in the concrete.

6 Fixing the Machine in Place 6

Anchoring:

Cementing in stone bolts:

Steps:
Insert stone bolts in the holes of the angle bracket with spring washers and nuts.
Level the machine. If the floor is uneven, level the machine with wedges and even out the surface with filler (epoxy resins).
Fill anchoring holes with fast-drying cement.
After it sets, tighten the nuts evenly.

Safety expansion anchor:

Steps:
Position the machine in its intended position.
Use the holes of the angle bracket as a drilling template.
Pre-drill with a 14 mm (.5 in) stone drill. Minimum drilling depth 100 mm (3.9 in). Drill in vertically!
Drill the holes 140 mm (5.5 in) deep with the 18 m (0.7 in) stone drill.
Remove the nuts and washers of the expansion anchor. Shorten the upper plug brush.
Insert the anchor in the bore hole.
Level the machine.
If the floor is uneven, level the machine with wedges and even out the surface with filler (epoxy resins).

Tighten the nuts on the anchors evenly.

Threaded rod (bored through ceiling)

Steps:
Position the machine in its intended position.
Use the holes of the angle bracket as a drilling template.
Pre-drill with 14 mm (.5 in) stone drill. Drill in vertically!
Use a 20 mm (.8 in) stone drill to drill the holes for normal ceiling installation
(See foundation schematic, Point 5.4)
Position the machine or attach the angle bracket and level.
The angle bracket must lie flat against the ceiling.
If the floor is uneven, level the machine with wedges and even out the surface with filler (epoxy resins).

6 Fixing the Machine in Place 6

Adhesive plugs/shear connector

Steps:
Position the machine in its intended position.
Use the holes of the angle bracket as a drilling template.
Pre-drill with a 14 mm (.5 in) stone drill. Drill in vertically!

Bore holes: Drill the diameter and depth according the information provided by the plug manufacturer and blow out any dust.

For further steps, refer to the information provided by the plug manufacturer.

Note the hardening time.

Position the machine or attach the angle bracket and level.
If the floor is uneven, level the machine with wedges and even out the surface with filler (epoxy resins).

Tighten the nuts evenly.

7 Connection 7

7.1 Dimensioned Drawing of the Machine Connections 7.1

Slimline

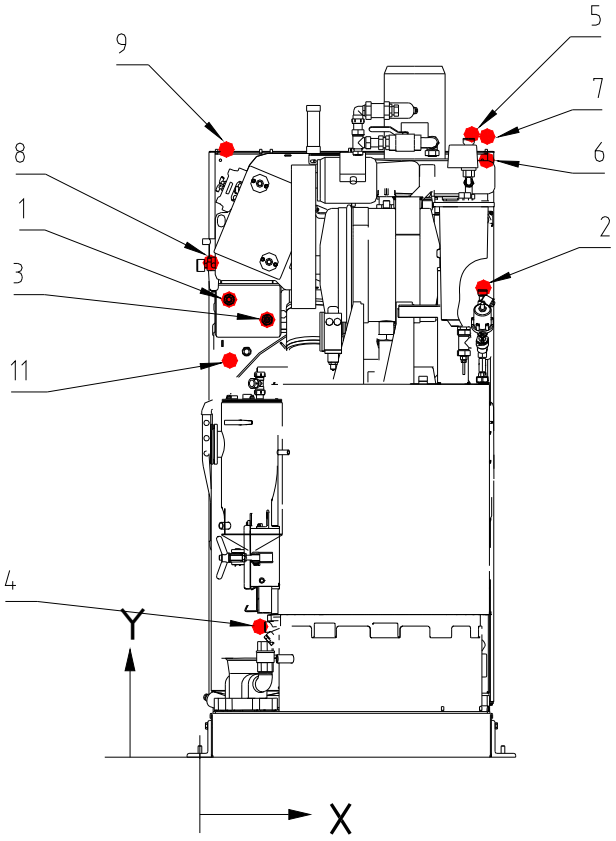

70777 0-19-0

We reserve the right to change dimensions!

Item	Medium	NW mm	Inch	-X- mm	-X- in.	-Y- mm	-Y- in.
1	Steam heater battery machine	15	1/2	96	3.7	1495	58.8
2	Steam distillation	15	1/2	931	36.6	1540	60.6
3	Condensate heater battery machine	15	1/2	221	8.7	1430	56.2
4	Condensate distillation	15	1/2	198	7.8	405	15.9
5	Cooling water inlet	20	3/4	893	35.1	2035	80.1
6	Cooling water outlet, distillation	20	3/4	943	37.1	1900	74.8
7	Cooling water outlet, refrigeration unit	20	3/4	943	37.1	2030	79.9
8	Compressed air	8	1/4	35	1.3	1615	63.5
9	Electric connection (front side top)	-	-	87	3.4	1985	78.1
11	Still rake out system – pump out	-	-	98	3.8	1350	53.1

-There must be a measuring potentiometer installed (on the machine) between the machine and customer wiring system.

7 Connection 7

Crossline

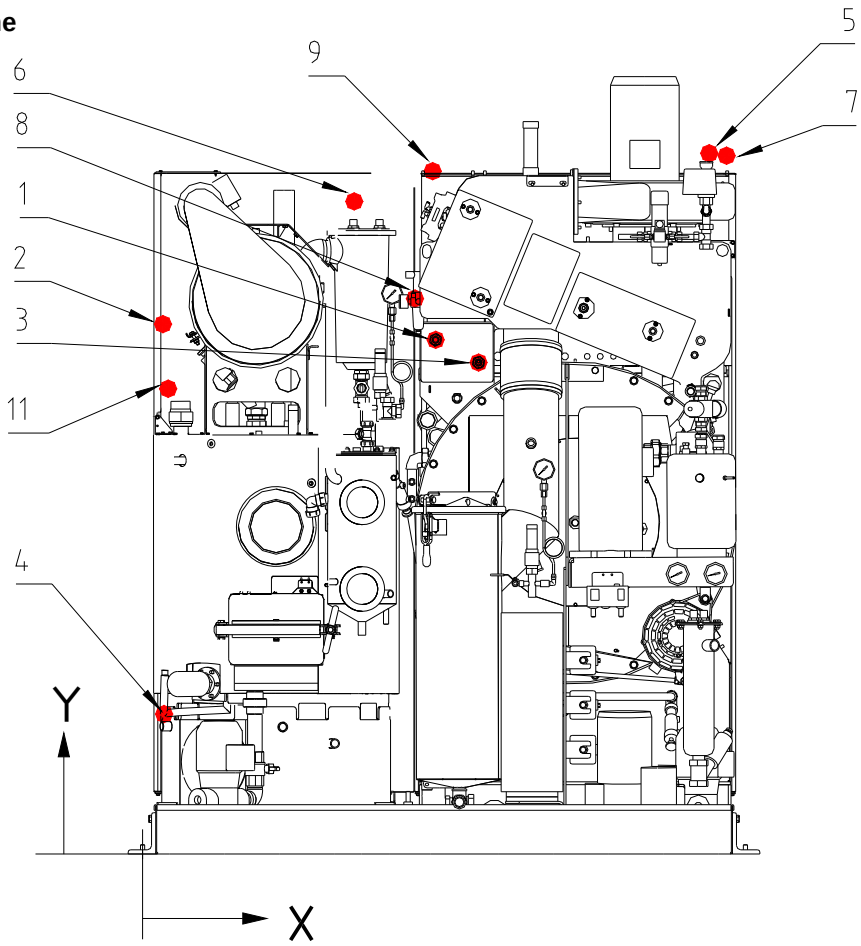

707770-20-0

We reserve the right to change dimensions!

Item	Medium	NW mm	Inch	-X- mm	-X- in.	-Y- mm	-Y- in.
1	Steam heater battery machine	15	1/2	854	33.6	1495	58.8
2	Steam distillation	15	1/2	60	2.3	1540	60.6
3	Condensate heater battery machine	15	1/2	979	38.5	1430	56.2
4	Condensate distillation	15	1/2	62	2.4	405	15.9
5	Cooling water inlet	20	3/4	1650	64.9	2035	80.1
6	Cooling water outlet, distillation	20	3/4	617	24.2	1900	74.8
7	Cooling water outlet, refrigeration unit	20	3/4	1700	66.9	2030	79.9
8	Compressed air	8	1/4	793	31.2	1615	63.5
9	Electric connection (front side top)	-	-	845	33.2	1985	78.1
11	Still rake out system – pump out	-	-	74	2.9	1350	53.1

-There must be a measuring potentiometer installed (on the machine) between the machine and customer wiring system.

7 Connection 7

7.2 Lines and Pipelines 7.2

Connect the on-site supply and drain lines according to the information in the dimensioned drawing. Steam, condensate, compressed air and water must be equipped with stop valves. Follow DIN 1988 when connecting the water. To avoid transmission of structure-borne noise, you can connect the pipelines with a spacer of flexible metal tubing and insulate the pipe holders.

7.2.1 Steam

Insulate the installation und connection units.
Operating pressure is 4 - 5 bar (58 - 72.5 psi) saturated steam.
If the admission pressure is more than 5 bar (72.5 psi), build in a reducing valve with pressure gauge and set it so that the highest permissible temperature for perc of 150 °C (302 °F) (measure!) is not exceeded (danger of solvent decomposition and damage to the machine).

Peak steam demand (large steam generator):
P12/P15/P18

Drying	0.6 kg/min
Distillation	0.6 kg/min

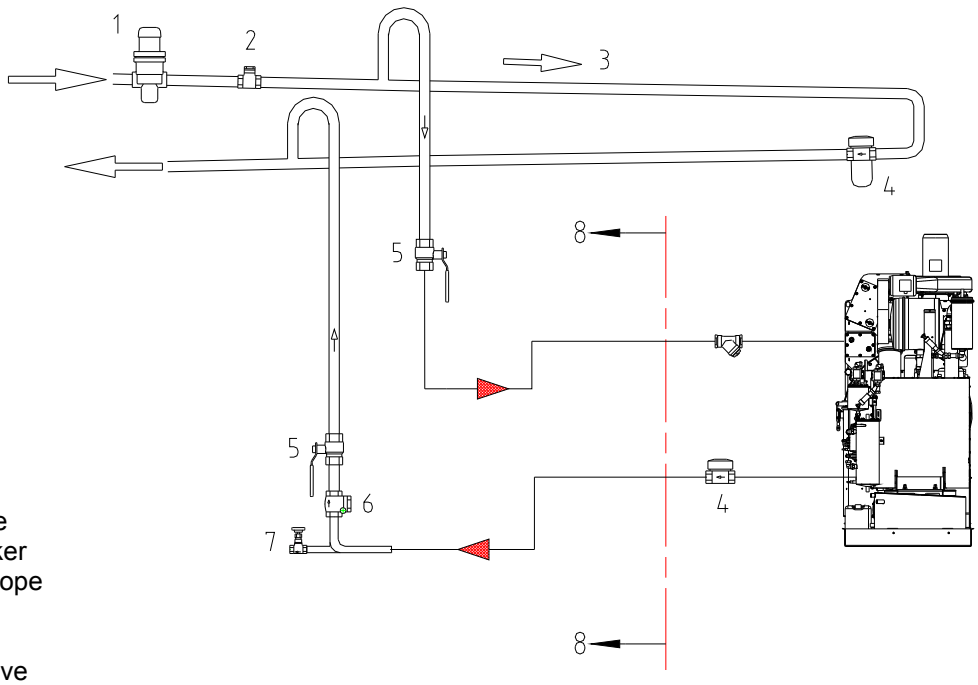

1 = reducing valve
2 = vacuum breaker
3 = descending slope
4 = steam trap
5 = stop valve
6 = non-return valve
7 = drain
8 = provided by customer

70776 7-12-0

7.2.2 Condensate

Install insulated condensate line so that it slopes away from the machine. If there is an ascending slope, put a non-return valve and drain at the lowest point.

<u>Attention:</u> Condensate counter-pressure must be at least 1.5 bar (21.8 psi) below the incoming steam pressure.

7 Connection 7

7.2.3 Cooling Water Supply

7.2.3.1 Mains Water Supply

The cross-sections of the lines to the machine should not get smaller and should be without bends and curves, if possible. The heat balance has been optimally designed for cooling water with an inlet temperature of 12 °C (53.6 °F) and uniform pressure of 2 - 4 bar (29 - 58 psi). (Minimum pressure 2.0 bar (29 psi) and maximum pressure 6.0 bar (87 psi))

A manually operated stop valve should be fitted.

Peak cooling water demand 2 - 4 bar (29 - 58 psi) at 12 °C (53.6 °F):

P12:	P15:	P18:
7 l/min	9 l/min	11 l/min
(1.8 US gal/min)	(2.4 US gal/min)	(2.9 US gal/min)

According to DIN 1988, a water flowback stop and venting device must be installed on machines in the Federal Republic of Germany.

7.2.3.2 Cooling Tower Operation

For cooling tower or recooling operation, the nominal width of the feeding and drain lines must be dimensioned to be larger than the nominal width of the circulation pump or must be dimensioned according to the pump.

Inlet temperatures are not allowed to exceed 24 °C (75.2 °F) because otherwise there is an increase in both solvent consumption and drying times.
Cooling water inlet temperatures that are too high can also overload the refrigeration unit.

The water pressure must be adapted to the high inlet temperature, up to double the peak demand.

In cooling tower or recooling operation, correct installation is especially important. Consequently, some of the things that must be kept in mind are the cooler capacity, mains water supply switch-over, pump size and cooling water by-pass.

The cooling water regulator (water economizer valve) must be corrected with a bypass (manual valve) for the distillation system (= continuous water flow).
The cooling water regulator on the refrigeration unit can be replaced with a regulator with a larger nominal width, if necessary.

The cooling water supply or the backfeeding to the rechiller should come from the mains water system or from a soft water system.

7 Connection 7

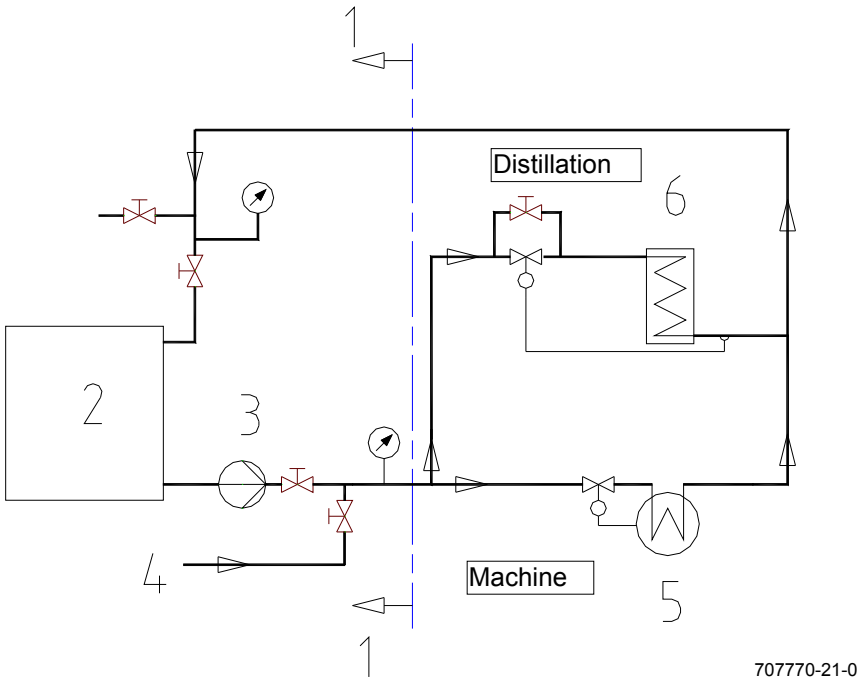

1 = customer side
2 = cooling tower
3 = circulation pump
4 = mains water supply
5 = refrigeration unit
6 = condenser

Data for temperatures up to 24 °C (75.2 °F)
(Nominal width NW at least 25 mm (1 inch)):

		P12	P15	P18
Pump throughput	m^3/h	1.7	2.2	2.7
	US gal/h	449.1	581.2	713.3
Pump pressure	bar	4-6	4-6	4-6
	psi	58 – 87	58 - 87	58 - 87

Heat to be dissipated over cooling water: * approx.

	P12	P15	P18
kJ/cycle	16000	19000	22000

* Refers to water without additives

Also refer to the separate installation and operating instructions for the rechilller.

7 Connection 7

7.2.4 Cooling Water Outlet

The cooling water leaving the system can be directed to the sewer system, reused or recooled because it circulates through the machine in a closed system and does not come into contact with the solvent. You should reuse the cooling water if at all possible.

7.2.5 Compressed Air

The operating pressure is 6 bar (87 psi). The machine is equipped with a compressed air reducing valve, pressure gauge and compressed air water separator. The line pressure should be 10 - 12 bar (145 - 174 psi).

7.2.6 Process Water

Empty the process water collecting tank daily.
Dispose of the contents according to the regulations for your country.

7.2.7 Aeration Line

Machine venting and aeration is done through a carbon filter cartridge or the Slimsorba (Option).

Attention: **For machines without Slimsorba, but loading door venting a connection pipe from the outlet valve to the outside has to be installed. If there is no connection to the outside, the inside room concentration can get to high.**

7 Connection 7

7.3 Electrical Connection 7.3

Caution

Only trained electricians are permitted to work on the electrical system.

Note the supply voltage (on the nameplate). Connect L1 /L2 /L3, neutral and ground wires with the appropriate cross section and fusing. Pass the cable into the switch panel through the PVC screwed union provided and connect to terminal.

Main switch connection

The main switch must be connected at the customer with an approved cable. Strip the cable right before the main switch only. Do not lay stripped cable in the cable trunking.

Ground-fault circuit interrupter at the customer

Ground-fault circuit interrupter at the customer
In case of a fault current breaker integratred in the building it is recommandable to make sure,if it is applicable to the machine with variable speed drive.

P12 /P15 /P18	Operating load kW	Max. Current A	Fuse A
400 V, 50 Hz			
Steam with distillation	7.4	18	25
Electric with distillation	20.1	38	50
Steam with distillation with Slimsorba	8.1	20	25
Electric with distillation with Slimsorba	26.5	49	63

P12 /P15 /P18	Operating load kW	Max. current A	Fuse A
230 V, 60 Hz			
Steam with distillation	7.4	26	35
Electric with distillation	20.1	60	63
Steam with distillation with Slimsorba	8.1	30	35
Electric with distillation with Slimsorba	26.5	79	80

7 Connection 7

7.3.1 Permissible Voltage Range

Attention:
The power supply must be measured at the machine before you turn the machine on. If it deviates from the standard voltage, you must adapt the machine to the local voltage with an autotransformer.

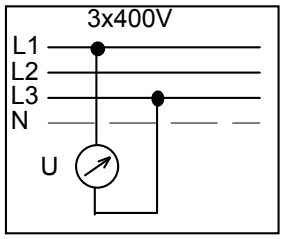

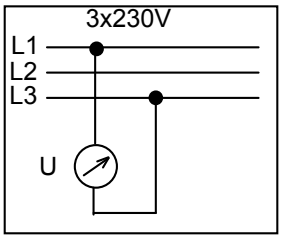

When making the electric connections for a drycleaning machine, you must observe the following voltage ranges:

1. Main supply (according to DIN IEC 38):		
Range	Primarily 400-V power system	Primarily 230-V power system
Not allowed; requires external adjustment	< 360 V	< 207 V
Normal working range Min: -10.0 % Max: + 6.0 %	360 V to 424 V	207 V to 244 V
Not allowed; requires external adjustment	> 424 V	> 244 V

Range	Primarily 230-V power system
Not allowed; requires external adjustment	< 207 V
Normal working range 207 V to 244 V	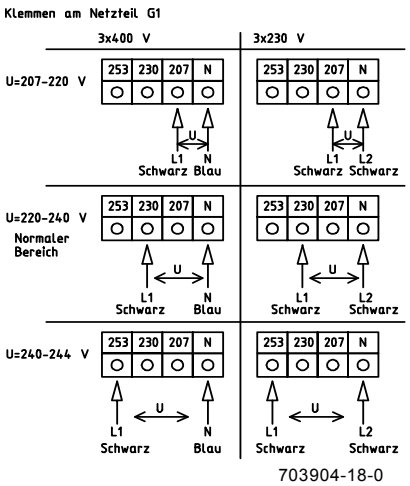
Not allowed; requires external adjustment	> 244 V

7 Connection 7

7.3.2 Room Ventilation Control

If there is already a room ventilation system, you can couple the automatic machine actions with the ventilation system.

In this case, the machine starts only when the room ventilation has been turned on.

Recommendation for renewing the room air:
The room ventilation must be sufficient to meet the requirements for your country.

Example: BGR 500 Kapitel 2.14:

The minimum requirement for renewing the room air is achieved when the dissipated amount of air in m^3/h is equal to 60 times the numerical value of the standard loaded amount in garments in kg. The air renewal rate can be limited to 5 per hour if the calculation results in a larger numerical value.

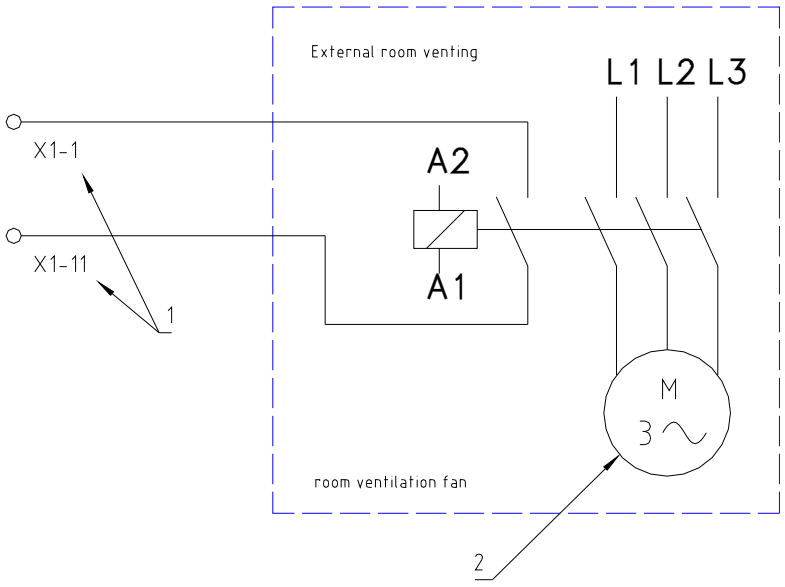

7077 70-22-0

1 = Terminals in switch panel, see machine circuit diagram
2 = External room ventilation - room ventilation fan

8 Important Information 8.

8.1 First Startup 8.1

The first startup of the machine must be performed by BÖWE Customer Service.

Attention: Before opening the switch panel or removing paneling, turn the main switch to the "0" position.

8.1.1 Preparatory Work

Set up the supply systems (electrical current, cooling water, compressed air, steam and condensate lines).

8.1.2 Filling Machine With Solvent

Use only stabilized, high-purity TETRACHLORETHENE (perc), in accordance with DIN 53978.

The amount of solvent needed is:

Machine P12 Tank I: approx. 60 l /15.8 US gal
Machine P15 Tank I: approx. 75 l /19.8 US gal
Machine P18 Tank I: approx. 90 l /23.7 US gal
Machine P12 Tank III: approx. 60 l /15.8 US gal
Machine P15 Tank III: approx. 75 l /19.8 US gal
Machine P18 Tank III: approx. 90 l /23.7 US gal
Total filling amount P12 for the 3-tank model: approx. 280 l / 73.9 US gal
Total filling amount P15 for the 3-tank model: approx. 330 l / 87.1 US gal
Total filling amount P18 for the 3-tank model: approx. 380 l / 100.4 US gal

For machines with 2 economy filters: + 40 l (10.5 US gal)
For machines with 2 economy filters and 1 cartridge filter: + 55 l (14.5 US gal)

Attention: Perc is a powerful fat solvent. Wear gloves when handling perc and apply protective skin ointment to hands when done. Do not smoke. If you get perc in your eyes, seek further medical care.

If there is no suction from the pump, pour approx. 5 liters (1.3 US gal) of solvent into the button trap. Check that the direction of rotation is correct.

8 Important Information 8

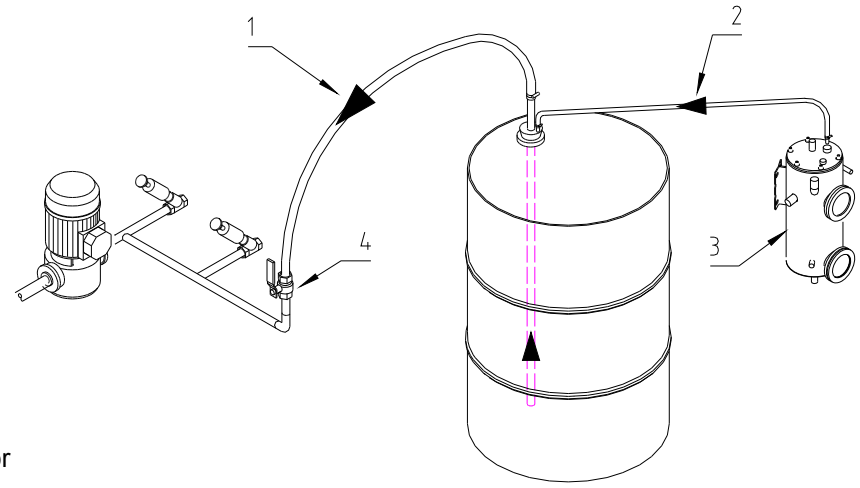

1 Solvent
2 Aeration
3 Water separator

707770-23-0

To fill without emissions, proceed as follows:

- Remove the screw cap on the pump line.
- Connect a hose between the barrel and pump suction side.
- Connect gas displacement line between the barrel and water separator.
- Open the ball valve.
- Start program P51.
- The tanks fill up, with one overflowing into the other.
- Watch the level of the liquid in the tanks and stop program P51 when the tanks 1 and 2 are full.
- fill tank 3 with P67
- fill tank 2 once more with P51
- Close the ball valve.
- Remove the connecting lines to the barrel.
- Screw the cap back on to the pump line.
- Remove the gas displacement line.

If may be necessary to refill with solvent after the filter is filled each time you replace a filter.

8.1.3 Refilling Solvent

Follow the procedure given in Point 8.1.2 for routine refilling of solvent.

	<u>Attention:</u> Even empty containers can still hold solvent residues. Therefore, tightly seal the container (barrel) again and store or dispose of in accordance with regulations!

8 Important Information 8

8.1.4 Filling Slimsorba Carbon Container (Optional Equipment)

- Loosen the upper tube of the carbon container (disassemble hose connections, sensors and venting line).
- Loosen the quick release fastener on the cover and remove cover.
- Remove fine filter sieve and clamping ring.
- Fill in 13 kg /28.6 lb) of activated carbon (cylindrical pellets with approx. 4 mm (0.16 inch) diameter, type Supersorbon K40). The heating coil must be covered.
- Replace the fine filter sieve and clamping ring.
- Replace the cover and close the quick release fastener.
- Attach the upper tube of the carbon container again (assemble hose connections, sensors and venting line.

8.2 Refrigeration Unit 8.2

	Attention: **No cooling agent is allowed to escape into the atmosphere during operation, servicing work and decommissioning of refrigeration units.** **You must keep a record of the quantities of cooling agent used and present this record to the authorities upon demand.** **Only people who have the necessary special knowledge and technical equipment are authorized to service and decommission refrigeration units.**

9 Technical Specifications 9

P12

Heating			**Steam**	**Electric**
Filling capacity		kg(lb)	12(26.5)	12(26.5)
Cage volume		l(US gal)	240(63.4)	240(63.4)
Cage diameter		mm(in)	820(32.3)	820(32.3)
Cage depth		mm(in)	460(18.1)	460(18.1)
Cleaning speed		RPM	35	35
Spinning speed		RPM	500	500
Max. g-factor			115	115
Low level		l(US gal)	30(7.9)	30(7.9)
High level		l(US gal)	60(15.8)	60(15.8)
Operating load (max. at 400 V, 50 Hz)				
With distillation		kW	7.4	20.1
With distillation with Slimsorba		kW	8.1	26.5
Connected loads:				
Compressor capacity		kW	3.5	3.5
Fan capacity HLL /NLL		kW	2.5 /1.85	2.5 /1.85
Solvent pump capacity		kW	0.55	0.55
Still rake out system pump capacity		kW	0.55	0.55
Cage drive capacity		kW	3.7	3.7
Filter drive capacity		kW	0.75	0.75
Slimsorba fan capacity		kW	0.75	0.75
Air shaft heater battery capacity		kW	-	7.3
Distillation capacity		kW	-	10
Slimsorba steam generator capacity		kW	-	6
Dimensions:				
Machine:				
Width:	Slimline	mm(in)	1080(42.5)	1080(42.5)
	Crossline	mm(in)	1840(72.4)	1840(72.4)
Depth:	Slimline	mm(in)	2165(85.2)	2165(85.2)
	Crossline	mm(in)	1406(55.3)	1406(55.3)
Height inc. trough		mm(in)	2260(89.0)	2260(89.0)
Floor space:	Slimline	$m^2(ft^2)$	2.3(24.8)	2.3(24.8)
	Crossline	$m^2(ft^2)$	2.5(27.0)	2.5(27.0)

9 Technical Specifications 9

P12

Heating			**Steam**	**Electric**
Filling volumes:				
Tank I	filling	l(US gal)	110(29.0)	110(29.0)
Tank II	filling	l(US gal)	70(18.5)	70(18.5)
Tank III	filling	l(US gal)	90(23.7)	90(23.7)
Economy filter		l(US gal)	40(10.6)	40(10.6)
Cartridge filter		l(US gal)	15(4)	15(4)
Distillation	filling	l(US gal)	120(31.7)	120(31.7)
Consumption for drying:				
Drying time inc. reduction	without Slimsorba	min.	17	17
	with Slimsorba	min.	22	22
El. energy drying	without Slimsorba	kWh	1.7	2.9
	with Slimsorba	KWh	1.9	2.8
Saturated steam drying	without Slimsorba	kg(lb)	1.8(4)	-
	with Slimsorba	kg(lb)	1.8(4)	
Cooling water drying (12 °C/53.6 °F)				
without Slimsorba		l(US gal)	60(15.8)	60(15.8)
with Slimsorba		l(US gal)	55(14.5)	55(14.5)
Consumption for distillation:				
Distilled solvent		l(US gal)	20(5.2)	20(5.2)
El. energy distillation		kWh	-	2.8
Saturated steam distillation		kg(lb)	4.0 (8.8)	-
Cooling water for dist. (12 °C or 53.6 °F)		l(US gal)	55(14.5)	55(14.5)
Consumption per cycle: *				
El. energy	without Slimsorba	kWh	1.9	5.9
	with Slimsorba	kWh	2.1	5.8
Saturated steam	without Slimsorba	kg(lb)	5.8(12.7)	-
	with Slimsorba	kg(lb)	5.8(12.7)	
Cooling water drying (12 °C or 53.6° F)				
without Slimsorba		l(US gal)	115(30.3)	115(30.3)
with Slimsorba		l(US gal)	110(29.0)	110(29.0)
Compressed air (6 bar/87 psi)		l(US gal)	6(1.6)	6(1.6)

Dimensions may differ if special options are used

9 Technical Specifications 9

P12

Heating			**Steam**	**Electric**
Other data:				
Dist. throughput (DIN 11916) max.		l/h(US gal/h)	120(31.7)	75(19.8)
Filter throughput		l/h(US gal/h)	4000(1056)	4000(1056)
Filter surface, economy filter		$m^2(ft^2)$	2.7(29.0)	2.7(29.0)
Weight without solvent:	Slimline	kg(lb)	1140(2513)	1140(2513)
	Crossline	kg(lb)	1240(2734)	1240(2734)
Weight with solvent:	Slimline	kg(lb)	1590(3505)	1590(3505)
	Crossline	kg(lb)	1690(3726)	1690(3726)
Floor space:	Slimline	$m^2(ft^2)$	2.3(24.81)	2.3(24.81)
	Crossline	$m^2(ft^2)$	2.5(27)	2.5(27)
Floor surface **	Slimline	$m^2(ft^2)$	1.3(14)	1.3(14)
	Crossline	$m^2(ft^2)$	1.3(14)	1.3(14)
Cage centrifugal force		N (lb)	5900(1326)	5900(1326)
Floor load	Slimline	$N/m^2(lb/ft^2)$	16500(344)	16500(344)
stat. and dyn.	Crossline	$N/m^2(lb/ft^2)$	17300(361)	17300(361)
Noise level		dB (A)	60	60
Carbon filling, Slimsorba		kg(lb)	13(28)	13(28)
Heat balance: *				
Heat to dissipate via cooling water ***:				
		kJ/cycle	16000	16000
Heat dissipated to the surroundings *:				
		kJ/cycle	4000	4000

* Values apply to a standard 2-bath cycle, 1st bath low level for distillation at cooling water inlet temperature + 12 °C (53.6 °F), cage housing outlet temperature 50 °C (122 °F), steam supply 4 – 5 bar (58 – 72.5 psi) overpressure saturated steam, ambient temperature 5 to + 40 °C (41 – 104 °F)

** Portion of the floor surface for force transmission, see Installation Instructions, Point 5.3.1

*** Refers to water without any additives

Subject to change!

All values were taken under testing conditions and can deviate in practice!

9 Technical Specifications 9

P15

Heating		**Steam**	**Electric**
Filling capacity	kg(lb)	15(33.1)	15(33.1)
Cage volume	l(US gal)	300(79.2)	300(79.2)
Cage diameter	mm(in)	820(32.3)	820(32.3)
Cage depth	mm(in)	570(22.4)	570(22.4)
Cleaning speed	RPM	35	35
Spinning speed	RPM	500	500
Max. g-factor		115	115
Low level	l(US gal)	35(9.2)	35(9.2)
High level	l(US gal)	75(19.8)	75(19.8)
Operating load (max. at 400 V, 50 Hz)			
With distillation	kW	7.4	20.1
With distillation with Slimsorba	kW	8.1	26.5
Connected loads:			
Compressor capacity	kW	3.5	3.5
Fan capacity HLL /NLL	kW	2.5 /1.85	2.5 /1.85
Solvent pump capacity	kW	0.55	0.55
Still rake out system pump capacity	kW	0.55	0.55
Cage drive capacity	kW	3.7	3.7
Filter drive capacity	kW	0.75	0.75
Slimsorba fan capacity	kW	0.75	0.75
Air shaft heater battery capacity	kW	-	7.3
Distillation capacity	kW	-	10
Slimsorba steam generator capacity	kW	-	6
Dimensions:			
Machine:			
Width: Slimline	mm(in)	1080(42.5)	1080(42.5)
Crossline	mm(in)	1840(77.4)	1840(77.4)
Depth: Slimline	mm(in)	2165(86.0)	2165(86.0)
Crossline	mm(in)	1406(55.3)	1406(55.3)
Height inc. trough	mm(in)	2260(89.0)	2260(89.0)
Floor space: Slimline	$m^2(ft^2)$	2.3(24.8)	2.3(24.8)
Crossline	$m^2(ft^2)$	2.5(26.9)	2.5(26.9)
Filling volumes:			
Tank I filling	l(US gal)	145(38.3)	145(38.3)
Tank II filling	l(US gal)	95(25.1)	95(25.1)
Tank III filling	l(US gal)	90(23.7)	90(23.7)
Economy filter	l(US gal)	40(10.6)	40(10.6)
Cartridge filter	l(US gal)	15(4)	15(4)
Distillation filling	l(US gal)	120(31.7)	120(31.7)

9 Technical Specifications

P15

Heating			**Steam**	**Electric**
Consumption for drying:				
Drying time inc. reduction	without Slimsorba	min.	19	19
	with Slimsorba	min.	24	24
Elec. energy drying	without Slimsorba	kWh	1.8	3.0
	with Slimsorba	kWh	2.0	2.9
Saturated steam drying	without Slimsorba	kg(lb)	2.0(4.4)	-
	with Slimsorba	kg(lb)	2.0(4.4)	-
Cooling water drying	without Slimsorba	l(US gal)	65(17.1)	65(17.1)
12 °C (53.6 °F)	with Slimsorba	l(US gal)	60(15.8)	60(15.8)
Consumption for distillation:				
Distilled solvent		l(US gal)	25(6.6)	25(6.6)
Elec. energy distillation		kWh	-	3.6
Saturated steam distillation		kg(lb)	5.4(11.9)	-
Cooling water for dist. (12 °C or 53.6 °F)		l(US gal)	70(18.4)	70(18.4)
Consumption per cycle: *				
El. energy	without Slimsorba	kWh	2.0	6.8
	with Slimsorba	kWh	2.2	6.7
Saturated steam	without Slimsorba	kg(lb)	7.4(16.3)	-
	with Slimsorba	kg(lb)	7.4(16.3)	-
Cooling water drying	without Slimsorba	l(US gal)	135(35.6)	135(35.6)
(12 °C or 53.6 °F)	with Slimsorba	l(US gal)	130(34.3)	130(34.3)
Compressed air (6 bar or 87 psi)		l(US gal)	6(1.6)	6(1.6)

9 Technical Specifications 9

P15

Heating			**Steam**	**Electric**
Other data:				
Dist. throughput (DIN 11916) max.		l/hr(US gal/h)	120(31.7)	75(19.8)
Filter throughput		l/h(US gal/h)	4000(1056)	4000(1056)
Filter surface, economy filter		$m^2(ft^2)$	2.7(29.0)	2.7(29.0)
Weight without solvent:	Slimline	kg(lb)	1240(2734)	1240(2734)
	Crossline	kg(lb)	1340(2954)	1340(2954)
Weight with solvent:	Slimline	kg(lb)	1770(3902)	1770(3902)
	Crossline	kg(lb)	1870(4123)	1870(4123)
Floor space:	Slimline	$m^2(ft^2)$	2.3(24.8)	2.3(24.8)
	Crossline	$m^2(ft^2)$	2.5(26.9)	2.5(26.9)
Floor surface: **	Slimline	$m^2(ft^2)$	1.41(15.2)	1.41(15.2)
	Crossline	$m^2(ft^2)$	1.41(15.2)	1.41(15.2)
Cage centrifugal force		N(lb)	7300(1640)	7300(1640)
Floor load, stat. and dyn:	Slimline	N/m^2 (N/ft^2)	17500(365)	17500(365)
	Crossline	N/m^2 (N/ft^2)	18200(380)	18200(380)
Noise level		dB (A)	60	60
Carbon filling, Slimsorba		kg(lb)	13(28)	13(28)
Heat balance: *				
Heat to dissipate via cooling water ***:				
		kJ/cycle	19000	19000
Heat dissipated to the surroundings *:				
		kJ/cycle	4500	4500

* Values apply to a standard 2-bath cycle, 1st bath low level for distillation at cooling water inlet temperature + 12 °C (53.6 °F), cage housing outlet temperature 50 °C (122 °F), steam supply 4 – 5 bar (58 – 72.5 psi) overpressure saturated steam, ambient temperature 5 to + 40 °C (41 – 104 °F)

** Portion of the floor surface for force transmission, see Installation Instructions, Point 5.3.1

*** Refers to water without any additives

Subject to change!

All values were taken under testing conditions and can deviate in practice!

9 Technical Specifications 9

P18

Heating			**Steam**	**Electric**
Filling capacity		kg(lb)	18(39.7)	18(39.7)
Cage volume		l(US gal)	360(95.1)	360(95.1)
Cage diameter		mm(in)	820(32.3)	820(32.3)
Cage depth		mm(in)	680(26.7)	680(26.7)
Cleaning speed		RPM	35	35
Spinning speed		RPM	500	500
Max. g-factor			115	115
Low level		l(US gal)	45(11.9)	45(11.9)
High level		l(US gal)	90(23.7)	90(23.7)
Operating load (max. at 400 V, 50 Hz)				
With distillation		kW	7.4	20.1
With distillation with Slimsorba		kW	8.1	26.5
Connected loads:				
Compressor capacity		kW	3.5	3.5
Fan capacity HLL /NLL		kW	2.5 /1.85	2.5 /1.85
Solvent pump capacity		kW	0.55	0.55
Still rake out system pump capacity		kW	0.55	0.55
Cage drive capacity		kW	3.7	3.7
Filter drive capacity		kW	0.75	0.75
Slimsorba fan capacity		kW	0.75	0.75
Air shaft heater battery capacity		kW	-	7.3
Distillation capacity		kW	-	10
Slimsorba steam generator capacity		kW	-	6
Dimensions:				
Machine:				
Width:	Slimline	mm(in)	1080(42.5)	1080(42.5)
	Crossline	mm(in)	1840(77.4)	1840(77.4)
Depth:	Slimline	mm(in)	2275(89.5)	2275(89.5)
	Crossline	mm(in)	1540(60.6)	1540(60.6)
Height inc. trough		mm(in)	2260(89.0)	2260(89.0)
Floor space: Slimline		$m^2(ft^2)$	2.4(25.8)	2.4(25.8)
Crossline		$m^2(ft^2)$	2.8(30.1)	2.8(30.1)
Filling volumes:				
Tank I	filling	l(US gal)	155(40.9)	155(40.9)
Tank II	filling	l(US gal)	100(26.4)	100(26.4)
Tank III	filling	l(US gal)	90(23.7)	90(23.7)
Economy filter		l(US gal)	40(10.6)	40(10.6)
Cartridge filter		l(US gal)	15(4)	15(4)
Distillation	filling	l(US gal)	120(31.7)	120(31.7)

9 Technical Specifications 9

P18

Heating			**Steam**	**Electric**
Consumption for drying:				
Drying time inc. reduction	without Slimsorba	min.	21	21
	with Slimsorba	min.	26	26
Elec. energy drying	without Slimsorba	kWh	1.9	3.1
	with Slimsorba	kWh	2.1	3.0
Saturated steam drying	without Slimsorba	kg(lb)	2.2(4.8)	-
	with Slimsorba	kg(lb)	2.2(4.8)	-
Cooling water drying	without Slimsorba	l(US gal)	70(18.4)	70(18.4)
12 °C (53.6 °F)	with Slimsorba	l(US gal)	65(17.1)	65(17.1)
Consumption for distillation:				
Distilled solvent		l(US gal)	30(7.9)	30(7.9)
Elec. energy distillation		kWh	-	4.4
Saturated steam distillation		kg(lb)	6.8(14.9)	-
Cooling water for dist. (12 °C or 53.6 °F)		l(US gal)	85(22.4)	85(22.4)
Consumption per cycle: *				
El. energy	without Slimsorba	kWh	2.1	7.7
	with Slimsorba	kWh	2.3	7.6
Saturated steam	without Slimsorba	kg(lb)	9.0(19.8)	-
	with Slimsorba	kg(lb)	9.0(19.8)	-
Cooling water drying	without Slimsorba	l(US gal)	155(40.9)	155(40.9)
(12 °C or 53.6 °F)	with Slimsorba	l(US gal)	150(39.6)	150(39.6)
Compressed air (6 bar or 87 psi)		l(US gal)	6(1.6)	6(1.6)

9 Technical Specifications 9

P18

Heating			**Steam**	**Electric**
Other data:				
Dist. throughput (DIN 11916) max.		l/hr(US gal/h)	120(31.7)	75(19.8)
Filter throughput		l/h(US gal/h)	4000(1056)	4000(1056)
Filter surface, economy filter		$m^2(ft^2)$	2.7(29.0)	2.7(29.0)
Weight without solvent:	Slimline	kg(lb)	1340(2954)	1340(2954)
	Crossline	kg(lb)	1440(3175)	1440(3175)
Weight with solvent:	Slimline	kg(lb)	1950(4299)	1950(4299)
	Crossline	kg(lb)	2050(4520)	2050(4520)
Floor space:	Slimline	$m^2(ft^2)$	2.4(25.8)	2.4(25.8)
	Crossline	$m^2(ft^2)$	2.8(30.1)	2.8(30.1)
Floor surface: **	Slimline	$m^2(ft^2)$	1.53(16.4)	1.53(16.4)
	Crossline	$m^2(ft^2)$	1.53(16.4)	1.53(16.4)
Cage centrifugal force		N(lb)	8800(1977)	8800(1977)
Floor load, stat. and dyn:	Slimline	N/m^2 (N/ft^2)	18300(382)	18300(382)
	Crossline	N/m^2 (N/ft^2)	18900(394)	18900(394)
Noise level		dB (A)	60	60
Carbon filling, Slimsorba		kg(lb)	13(28)	13(28)
Heat balance: *				
Heat to dissipate via cooling water ***:				
		kJ/cycle	22000	22000
Heat dissipated to the surroundings *:				
		kJ/cycle	5000	5000

* Values apply to a standard 2-bath cycle, 1st bath low level for distillation at cooling water inlet temperature + 12 °C (53.6 °F), cage housing outlet temperature 50 °C (122 °F), steam supply 4 – 5 bar (58 – 72.5 psi) overpressure saturated steam, ambient temperature 5 to + 40 °C (41 – 104 °F)

** Portion of the floor surface for force transmission, see Installation Instructions, Point 5.3.1

*** Refers to water without any additives

Subject to change!

All values were taken under testing conditions and can deviate in practice!

10 Settings and Optimum Operating Values 10

			P12	P15
Basic value:				
Steam pressure (saturated steam)		bar(psi)	4–5(58–72.5)	4–5(58 – 72.5)
Steam temperature (max. permitted)		°C(°F)	150(302)	150(302)
Cooling water pressure		bar(psi)	2-4(29-58)	2-4(29-58)
Cooling water temperature, max.		°C(°F)	25(77)	25(77)
Compressed air		bar(psi)	6(87)	6(87)
Cage speeds:				
Cleaning/		RPM	35	35
Spinning		RPM	500	500
Reversing cycle (cleaning)		sec.	10/1/10	10/1/10
Low level		l(US gal)	30(7.9)	35(9.2)
High level		l(US gal)	60(15.8)	70(18.5)
Pump pressure (max.)		bar(psi)	2.5(36.2)	2.5(36.2)
Filter surface, economy filter		m^2 (ft^2)	2.7(29.0)	2.7(29.0)
Filter powder (only for machines without emission-free still rake out system)		kg(lb)	1.2(2.6)	1.2(2.6)
Tank I: optimum filling volume (high level)		l(US gal)	60(15.8)	75(19.8)
Tank III: optimum filling volume		l(US gal)	60(15.8)	75(19.8)
Detergent solution cooler:				
Detergent solution thermal sensor: Detergent solution cooler ON		°C(°F)	15–30(59-86)	15 – 30(59-86)
Refrigeration technology:				
Filling capacity, cooling agent R 404A		kg(lb)	4.6(10.1)	4.6(10.1)
Nozzle size: solvent cooling		no.	03	03
D rying + Reduction		no.	06	06
High pressure control switch ON	approx.	bar(psi)	21(319)	21(319)
High pressure control switch OFF	approx.	bar(psi)	26(377)	26(377)
Low pressure control	approx.	bar(psi)	1(14.5)	1(14.5)
Drying:				
Cooling water regulator setting:				
Adjust 4 – 6 min. after start of drying		bar(psi)	20(290)	20(290)
Temp. sensor, cage entry (gentle drying)		°C(°F)	60(140)	60(140)
Temp. sensor, cage exit		°C(°F)	50(122)	50(122)
Temp. sensor after cooler:				
Control value, drying		°C(°F)	40(104)	40(104)
Control value, cycle end		°C(°F)	15(59)	15(59)
Safety thermostat, heater battery (elec. only)		°C(°F)	110(230)	110(230)

10 Settings and Optimum Operating Values

		P12	P15
Distillation:			
Cooling water regulator condenser	°C(°F)	45(113)	45(113)
Thermal sensor:			
Cycle distillation OFF	°C(°F)	135(275)	135(275)
Still stripping OFF	°C(°F)	138(280)	138(280)
Still stripping OFF (electric)	°C(°F)	145(293)	145(293)
Thermal sensor, distilled solvent	°C(°F)	55(131)	55(131)
Panel in steam feeder	mm(in)	4(0.16)	4(0.16)
Panel in direct steam line	mm(in)	3(0.12)	3(0.12)
Water filling capacity in heating chamber, approx.	l(US gal)	5(1.3)	5(1.3)
Pressure control switch, still (el):			
ON	bar(psi)	5.2(75.4)	5.2(75.4)
OFF	bar(psi)	5.6(81.2)	5.6(81.2)
Safety thermostat, heating rod (elec. Only)	°C(°F)	230(446)	230(446)

10 Settings and Optimum Operating Values 10

			P18
Basic value:			
Steam pressure (saturated steam)		bar(psi)	4–5(58–72.5)
Steam temperature (max. permitted)		°C(°F)	150(302)
Cooling water pressure		bar(psi)	2-4(29-58)
Cooling water temperature, max.		°C(°F)	25(77)
Compressed air		bar(psi)	6(87)
Cage speeds:			
Cleaning/		RPM	35
Spinning		RPM	500
Reversing cycle (cleaning)		sec.	10/1/10
Low level		l(US gal)	45(11.9)
High level		l(US gal)	90(23.7)
Pump pressure (max.)		bar(psi)	2.5(36.2)
Filter surface, economy filter		m^2 (ft^2)	2.7(29.0)
Filter powder (only for machines without emission-free still rake out system)		kg(lb)	1.2(2.6)
Tank I: optimum filling volume (high level)		l(US gal)	90(23.7)
Tank III: optimum filling volume		l(US gal)	90(23.7)
Detergent solution cooler:			
Detergent solution thermal sensor: Detergent solution cooler ON		°C(°F)	15–30(59-86)
Refrigeration technology:			
Filling capacity, cooling agent R 404A		kg(lb)	4.6(10.1)
Nozzle size: solvent cooling		no.	03
D rying + Reduction		no.	06
High pressure control switch ON	approx.	bar(psi)	21(319)
High pressure control switch OFF	approx.	bar(psi)	26(377)
Low pressure control	approx.	bar(psi)	1(14.5)
Drying:			
Cooling water regulator setting:			
Adjust 4 – 6 min. after start of drying		bar(psi)	20(290)
Temp. sensor, cage entry (gentle drying)		°C(°F)	60(140)
Temp. sensor, cage exit		°C(°F)	50(122)
Temp. sensor after cooler:			
Control value, drying		°C(°F)	40(104)
Control value, cycle end		°C(°F)	15(59)
Safety thermostat, heater battery (elec. only)		°C(°F)	110(230)

10 Settings and Optimum Operating Values

		P18
Distillation:		
Cooling water regulator condenser	°C(°F)	45(113)
Thermal sensor:		
Cycle distillation OFF	°C(°F)	135(275)
Still stripping OFF	°C(°F)	138(280)
Still stripping OFF (electric)	°C(°F)	145(293)
Thermal sensor, distilled solvent	°C(°F)	55(131)
Panel in steam feeder	mm(in)	4(0.16)
Panel in direct steam line	mm(in)	3(0.12)
Water filling capacity in heating chamber, approx.	l(US gal)	5(1.3)
Pressure control switch, still (el):		
ON	bar(psi)	5.2(60.9)
OFF	bar(psi)	5.6(66.7)
Safety thermostat, heating rod (elec. Only)	°C(°F)	230(446)

11 Safety Remarks Located on the Machine 11

Gemäß EN ISO 8230 befinden sich an der Maschine nachfolgende Sicherheitshinweise:

In accordance with EN ISO 8230 the machine is fitted with safety hints as given below:

Conforme à EN ISO 8230 les indications de sécurité suivantes se trovent à la machine:

Kontaktwasser kann geringe Spuren von Lösemittel enthalten.
Vorschriftsmäßig entsorgen!

Contact water may contain small quantities of solvent.
Please dispose according to the regulation in your country!

L'eau de contact peut contenir une petite quantité de solvant.
Evacuer l'eau de contact conformément à la réglementation.

SN 708073

Nadelfänger täglich bzw. bei Bedarf öfter reinigen
(Nur bei ausgeschalteter Maschine und nach beendeter Trocknungsphase).

Clean button trap if necessary but at least once a day
(only if machine is switched off and the drying phase has been finished).

Nettoyer le filtre à épingle tous les jours et si nécessaire plus souvent (seulement hors fonctionement de la machine et après une opération de séchage).

SN 708074

Reinigen der Destillation nur bei
- ausgeschalteter Maschine und
- kalter Destillierblase durchführen

Clean still only if
- machine is switched off and
- distillation is cold

Nettoyer l'alambic seulement si:
-La machine est hors de fonctionement
- Le distillateur est revenu à température ambiante

SN 708075

11 Safety Remarks Located on the Machine 11

Vorsicht!
Heiße Oberflächen

Attention!
Hot surfaces

Attention!
Surface chaude

SN 708076

Zulässige Füllmenge

Max. filling capacity

Capacité admissible

SN 708086

Filter täglich bzw. bei Bedarf öfter reinigen
(nur bei ausgeschalteter Maschine und nach beendeter Trocknungsphase)

Clean lint filter if necessary but at least once a day
(only if machine is switched off and the drying phase has been finished.)

Nettoyer le filtre tous les jours et si nécessaire plus souvent
(seulement hors fonctionement de la machine et après une opération de séchage).

SN 708087

Filter und Wasserabscheider dürfen manuell
nur bei leerer Destillation abgelassen werden.

Filter and water separator must only be drained manually
if the distillation is empty.

La vidange manuelle du filtre à solvant et du séparateur d'eau
est seulement permise quand le distillateur est vide.

SN 708077

12 kg /30 lbs. **Zulässige Füllmenge** ***Max. filling capacity*** **Capacité admissible** SN 708078	**15 kg 35 lbs.** **Zulässige Füllmenge** ***Max. filling capacity*** **Capacité admissible** SN 708079

18 kg /40 lbs. **Zulässige Füllmenge** ***Max. filling capacity*** **Capacité admissible** SN 710810	

BÖWE Textile Cleaning GmbH
Dr.-Georg-Schaeffler-Strasse 22, D-77815 Bühl
phone 0049-(0)7223-80103-0, fax 0049-(0)7223-80103-29
email: vertrieb@boewe-tc.de
www.boewe-tc.de